KRULL

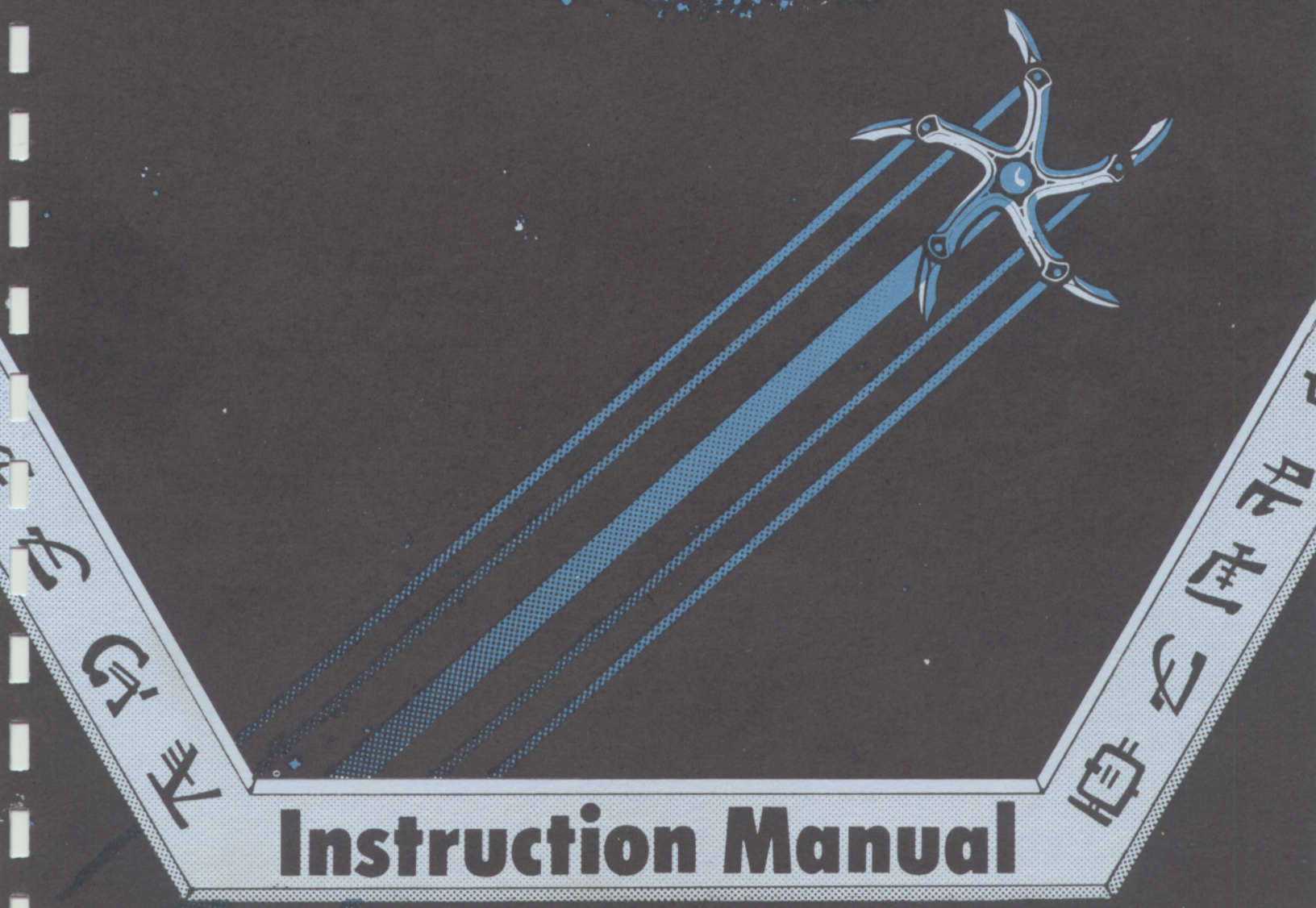

Instruction Manual

Gottlieb™

KRULL (GAME GV-105)
INSTRUCTION MANUAL

TABLE OF CONTENTS

SEC.		PAGE
I.	INSTALLATION	1
II.	INITIALIZATION	3
III.	GAME OPERATION	3
IV.	GAME PLAY AND SCORING	4
V.	SOUND/SPEECH	6
VI.	GAME ADJUSTMENTS/OPTIONS	6
VII.	BOOKKEEPING AND SELF TEST	7
VIII.	GENERAL INFORMATION	9
IX.	THEORY OF OPERATION	11
X.	WIRING AND SCHEMATIC DIAGRAMS	12
XI.	PARTS INFORMATION	33
	WELLS GARDNER MONITOR, SERVICE AND OPERATION MANUAL (Attached)	

"WARNING: This equipment generates, uses, and can radiate radio frequency energy and if not installed and used in accordance with the instructions manual, may cause interference to radio communications. It has been tested and found to comply with the limits for a Class A computing device pursuant to Subpart J of Part 15 of FCC Rules, which are designed to provide reasonable protection against such interference when operated in a commercial environment. Operation of this equipment in a residential area is likely to cause interference in which case the user at his own expense will be required to take whatever measures may be required to correct the interference."

NOTICE

WARRANTY INFORMATION IS LOCATED ON THE INSIDE BACK COVER.

FOR SERVICE, CALL TOLL FREE: 1-800-323-9121; (ILLINOIS) 1-800-942-1620

I. INSTALLATION

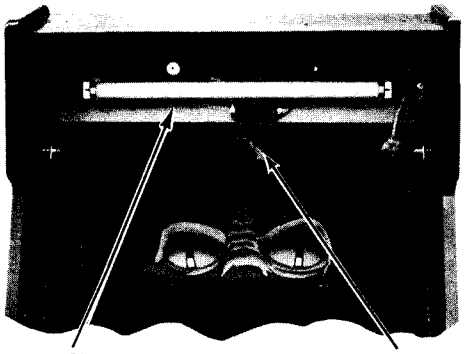

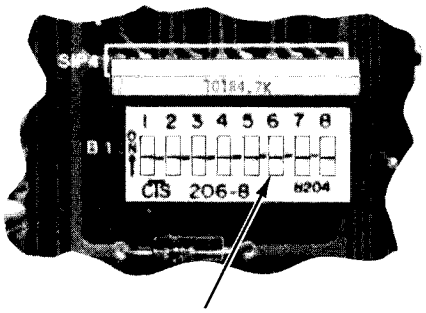

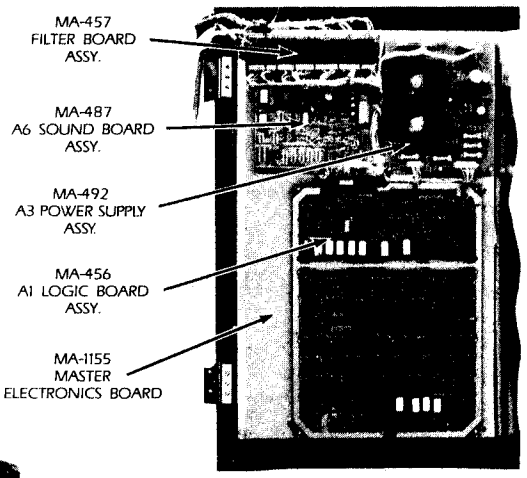

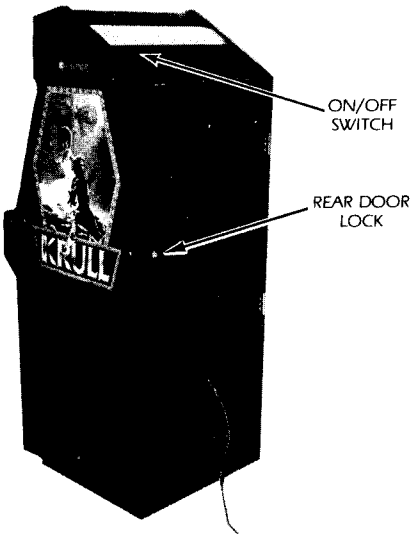

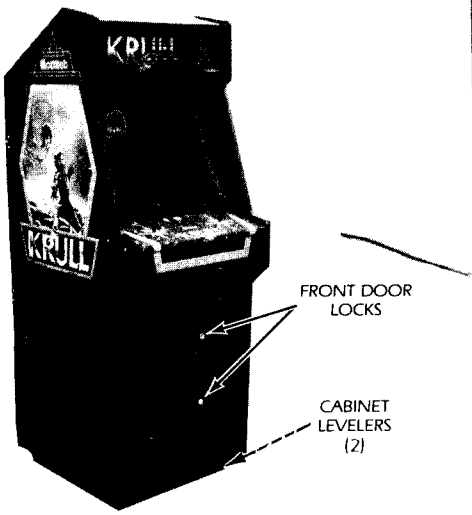

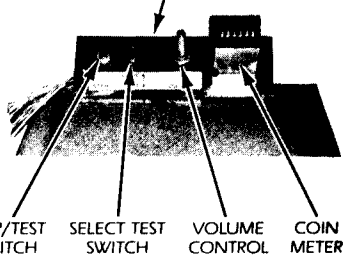

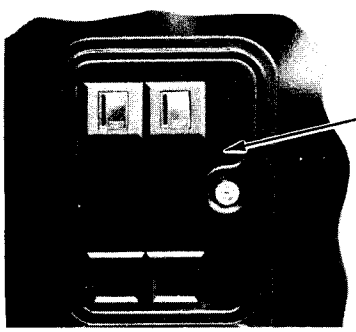

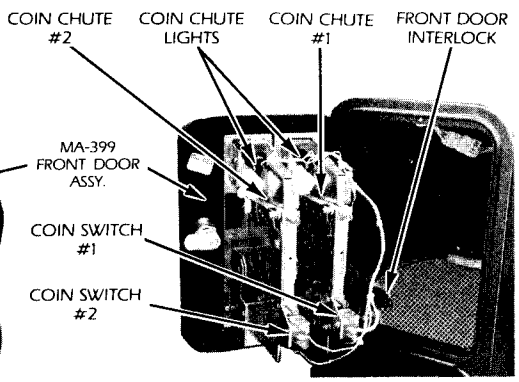

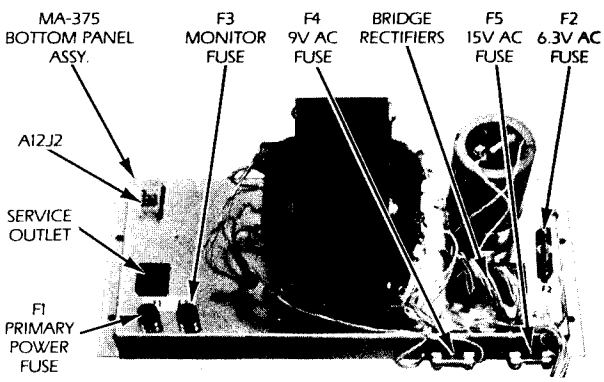

I. INSTALLATION

A. SET—UP

1. Carefully inspect the exterior of the game for any damage which might have occurred during shipment.
2. Unlock and open the rear cabinet door.
3. Check that all plug in connectors are seated firmly. The connectors are keyed so they will only go in one way.
4. Remove the binding strap from the line cord, and install the line cord plate in the groove provided (see photo).
5. Cabinet levelers (2) are stored within the cash box for shipping purposes. Install and adjust as necessary.

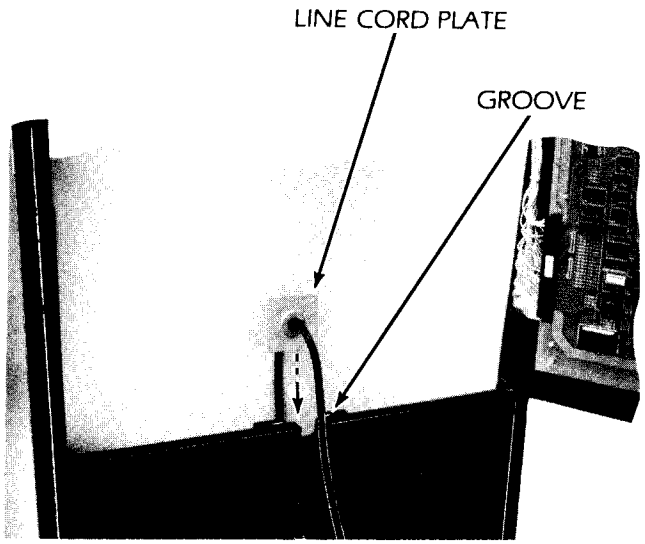

B. CHECK-OUT

1. Check that all cables are free of moving parts.
2. Check for any loose wires.
3. Check for loose solder or foreign matter on switches and power supply assemblies.
4. Be certain all fuses are seated firmly.
5. Be sure transformer wiring corresponds to the supply voltage.
6. Refer to section VI to make all the necessary game adjustments.
7. Reassemble the game.
8. Plug the line cord into a properly grounded 3-wire receptacle ONLY!!

C. CONTROL PANEL REMOVAL

1. Unplug the game.
2. Unlock and open the coin chute door.
3. Reach in through the coin chute door and remove the wing nut and flat washer from each of the two carriage bolts which secure the control panel to the game. Unlatch the control panel latch at the top center of the panel. Note where the latch strike plate is located. Remove the carriage bolts.
4. Pull the control panel back, grasp it at the front edge as far back as it will go (approximately ¼").
5. Raise the front of the control panel approximately one inch above its supports and lift the entire assembly high enough to disconnect plug A9J2/A9P2.
6. Remove the entire control panel assembly from the game.
7. The joystick's and leaf-switches are now accessible for removal or cleaning.
8. For reassembly, reverse the above procedure.

D. MONITOR REMOVAL

1. Unplug the game.
2. Perform the control panel assembly removal procedure (Section C).
3. Unlock and open the rear cabinet door.
4. NOTE: The color monitor contains HIGH VOLTAGES delivering LETHAL quantities of energy. Do not attempt to service the monitor until you have shorted the anode plug on the picture tube to ground.
5. Disconnect the video plug A17J1, the monitor power supply plug A12J3/A12P3 and the ground wire from the monitor chassis.
6. From the rear of the game, remove the one nut and one washer from each of the four carriage bolts used to secure the monitor to the platform.
7. Remove the monitor from the rear of the game, being careful to clear all cables from the CRT neck.
8. For reassembly, reverse the above procedure.

I. INSTALLATION

E. SPEAKER ASSEMBLY AND MARQUEE REMOVAL

1. Unplug the game.
2. Unlock and open the back door.
3. Unplug the A15-J1/P1 connector.
4. Unlatch the two latches on the rear of the Speaker Assembly Panel located inside the back door above the monitor.
5. On the front of the game, pull down on the lower molding under the marquee. The Speaker Assembly will lower to allow removal of the marquee.
6. Remove the marquee by lifting it upward out of its track. The Speaker Assembly and Illumination Assembly are now accessible for servicing.
7. Tilt the front of the Speaker Assembly downward while lifting the center upward. Pull the assembly straight out to remove. Be careful not to pinch the Speaker Assembly cable.
8. For reassembly, reverse the above procedure. When replacing the marquee:
   a. Tilt the front of the Speaker Assembly downward.
   b. Place the bottom of the marquee in the lower molding track on the front of the assembly.
   c. Apply slight pressure with your thumbs to the lower left and right corners of the marquee.
   d. Slowly raise the Speaker Assembly until the top of the marquee is in place in the upper track in the top molding.
   e. Be certain to reconnect the A15-J1/P1 connector and relatch the rear assembly latches.

II. INITIALIZATION

TURN GAME ON

Immediately, the coin chute lamps and the speaker marquee lamp will turn on.

AFTER A TEN SECOND DELAY

A. The attract mode appears on the screen.

B. The playing field cycles through the following:

1. High Game to Date screen
2. Instruction Set
3. Game Play Cycle

III. GAME OPERATION

A. GAME START

1. Insert coins into coin chute.
   a. Coin chute tune is played.
   b. Total credits are displayed on screen.
2. Press one or two player button to start game.
   a. Total Credits are decreased by one.
   b. Game initializes.

B. FIRST PLAYER

1. The first player's score displays a zero.
2. The other player's display will be blank.

C. SECOND PLAYER

1. Additional player is indicated by the words "COLWYN 2" and a zero in the second player's display.

D. COLWYN'S/EXTRA COLWYN'S

1. Each player will begin with three Colwyn's (dependent on Option/Parameter settings).
2. Extra Colwyn's are earned by achieving certain score levels (dependent on Option/Parameter settings).

IV. GAME PLAY AND SCORING

HOW TO PLAY

CONTROL PANEL

The left joystick controls the movement of the player character, Colwyn. He can be moved in any one of eight directions. The right joystick controls the movement of the player's weapon, the glaive. It can be thrown in any one of eight directions. Four glaives can be in flight at one time and will return to Colwyn with a boomerang-type action. The one and two player select buttons are also located on the panel.

Krull consists of five subgames: (1) The Mountain Game, (2) The Swamp Game, (3) The Fortress Game, (4) The Hexagon Game and (5) The Beast Game. The player must accomplish a task in each of the five games with eight levels of difficulty in each. All eight levels can be reached in one task based on the time spent performing that task (amount of time spent on that subgame). The total number of lethal characters on the screen at one time increases as the levels increase.

"FROM THE SKY WILL COME THE BLACK FORTRESS. FROM THE FORTRESS WILL COME THE SLAYERS, TO DEVOUR THE PLANET OF KRULL. THEN SHALL A GIRL OF ANCIENT NAME BECOME QUEEN, AND THE KING SHE CHOOSES SHALL RULE THE PLANET."

The planet Krull is threatened by the Beast. His army of Slayers has brought terror to the land. Colwyn must stop this terror and save the land and its people. On the day Colwyn is to wed the Princess Lyssa, the Slayers, army of the Beast, kidnap her to become the Beast's bride. Colwyn must reach the Black Fortress and reclaim his Princess. He who marries the Princess shall be king. The Beast must not be allowed to rule the planet.

A prophet acquaints Colwyn with the magical properties of the glaive, a five-bladed sword, which Colwyn must acquire. To accomplish this task, he must climb the mountain and collect the five individual blades of the glaive in order to assemble the weapon. The blade is picked up by touching Colwyn to the blade. Boulders are fatal and must be avoided. The weapon joystick is not utilized in this subgame. The player is awarded 1000 points for each blade picked up. Points are also awarded for placing Colwyn in a dangerous position in front of one or more boulders.

During his travels to discover the Black Fortress, Colwyn comes upon an army of eight men that he befriends and recruits to help him in his quest to destroy the Beast so that Krull can be safe from his evil.

With no intentions of losing his newly acquired bride without bloodshed, the Beast orders an army of Slayers to stop Colwyn and his friends. Forging through the quicksand-riddled swamps, Slayers materialize from the soil and Colwyn prepares for battle. In the second subgame, Colwyn must save as many friends as possible while killing all of the Slayers. The friends are saved by touching them and the Slayers are destroyed by the glaive. The Slayers themselves and their spears must be avoided. The game begins with eight friends. The number of friends saved is the number of friends carried over into future subgames. The friends can eliminate the Slayers with hand-to-hand combat but can also be destroyed themselves. Receiving three blows either by hand-to-hand or by the Slayer's spear is fatal to the friends. The subgame ends when there are no longer any friends to save and all of the Slayers have been eliminated. Avoid quicksand, as it slows Colwyn's attack. Each friend saved awards 1000 points (maximum 8000 points) and 100 points for each Slayer the player eliminates.

After days of travel, Colwyn and his men have found the Black Fortress in the Iron Desert where many dangers await them. While attempting to lead his men through the dangerous narrow passageways that lead to the Fortress, Slayers materialize once again in a second attempt to stop Colwyn's struggle. In this third subgame, Colwyn must pick up all of his friends and deposit them safely into the hexagon while again combating the Slayers. The total number of friends in this subgame is equal to the total number of friends saved in Subggame 2. This subgame concludes

IV. GAME PLAY AND SCORING

when all of the friends have been delivered to the hexagon. The player is awarded 1000 points for each friend delivered to the hexagon, 100 points for each Slayer he destroys and 100 points for each Slayer remaining when the last friend is delivered to the hexagon.

Victorious in battle, Colwyn must now attempt to release his friends from the hexagon. Unlike entry, exiting the hexagon is a struggle deservant of its own merit. Once again Colwyn must call upon the power of the glaive. Release of his friends is accomplished by throwing the glaive at the front wall while it is black only. Any glaive striking the wall while it is not black will stick in the wall until the wall becomes black. The Slayers, of course, attempt to stop Colwyn's efforts. In his own attempt for survival, Colwyn must fight them off and avoid their spears. The subgame ends when the last black wall is broken through and the friends have escaped. The player is awarded 100 points for each Slayer he puts an end to, 100 points for each Slayer remaining when the friends are set free and 1000 points for the first black wall destroyed, 2000 points for the second, 3000 points for the third and 4000 points for the fourth.

Now inside the Black Fortress, Colwyn secedes from his friends in order to rescue the Princess Lyssa. He finds her in a large cave carefully guarded by the Beast. He knows that the only way to reclaim his bride and conserve the planet is to forge into battle with the Beast. In the fifth subgame, the player moves Colwyn towards the Princess in order to reach her. As he progresses, the Beast attempts to stop him by throwing fireballs at him. The fireballs must be avoided or destroyed by the glaive. If not destroyed, the fireballs will ricochet off of the walls. Destroying a fireball awards the player 100 points multiplied by the number of fireballs in flight. The Beast is momentarily stunned when hit with a glaive and awards the player 100 points. The Beast cannot be destroyed and the player must avoid touching him. When Colwyn reaches the Princess, his friends, following the pandemonium of the battle, appear and chase the Beast off, awarding 1000 points per friend. The total number of friends in this subgame is equal to the total number of friends saved in Subgame 2.

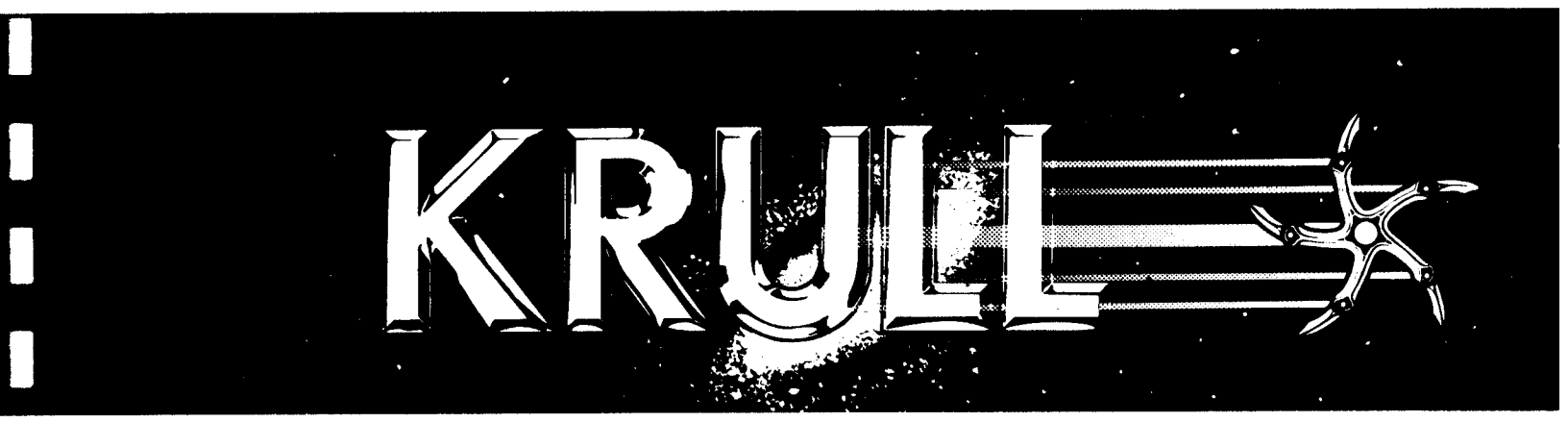

V. SOUND, VI. GAME ADJUSTMENTS/OPTIONS

V. SOUND

The Sound Board installed in this game has been programmed for sound only. The switch bank on the Sound Board is not used and the switch positions have no effect on the sound.

Note: The Sound Board and sound ROM's installed in this game are not compatible with the Sound Board or sound ROM's used on any other game.

VI. GAME ADJUSTMENTS/OPTIONS

A. CONTROL BOARD SWITCH ADJUSTMENTS

SWITCH 1 — LIVES PER GAME

OFF	3 LIVES
ON	5 LIVES

SWITCH 2 — ATTRACT PLAY

OFF	SOUND
ON	NO SOUND

SWITCHES 3 4 — COIN/CREDITS

3	4	
OFF	OFF	1/1
ON	OFF	1/2
OFF	ON	2/1
ON	ON	FREE PLAY

SWITCH 5 — HEXAGON CONTROL

OFF	ROVING
ON	STATIONARY

SWITCH 6 — DIFFICULTY CONTROL

OFF	NORMAL
ON	HARD

SWITCHES 7 8 — EXTRA LIVES

7	8	FIRST EXTRA LIFE	EACH ADDITIONAL LIFE
OFF	OFF	30,000 POINTS	EVERY 50,000 POINTS
OFF	ON	40,000 POINTS	EVERY 50,000 POINTS
ON	OFF	30,000 POINTS	EVERY 30,000 POINTS
ON	ON	50,000 POINTS	EVERY 75,000 POINTS

B. SOUND ADJUSTMENTS

The audio output is controlled by the potentiometer mounted on the service panel assembly (located inside the coin mechanism door).

Turning the potentiometer counter-clockwise will decrease the volume. Turning it clockwise will increase the volume.

IMPORTANT: Each of the potentiometers installed on the Sound board have been factory adjusted. The potentiometer settings should never be changed when performing the recommended calibration procedure.

C. MONITOR ADJUSTMENTS

Normally, few if any adjustments are required for proper monitor operation. However, after any major repairs to the monitor chassis refer to the attached monitor manual.

VII. BOOKKEEPING AND SELF TEST

SELF TEST

The battery back-up bookkeeping functions of this game are contained in Self Test steps 3 and 4. These are in addition to the electro-mechanical coin counter located inside the front door panel. Every time a coin is inserted into a coin slot, the counter is energized, incrementing the count.

The self-test consists of six functions which may be used to identify problems in the video system and to change program parameters.

The self-test mode is entered by setting the self-test toggle switch located inside the cash door to "TEST". A selection of available tests is displayed on the monitor. To return to the GAME mode at any time, the operator needs only to set the toggle switch back to "GAME".

Selection of tests is done with the push button switch labled "SELECT". Upon entering the test mode, a flashing arrow points to the first test selection. Momentarily depressing the "SELECT" button will advance through each selection one by one.

When the arrow is pointing to the desired test, the operator may begin that test by pressing the "SELECT" button and holding it down until the test appears on the screen.

Once a test has been selected, the operator can return to the selection list by holding down the select switch until it re-appears. The six tests are as follows:

1. MONITOR ADJUSTMENT

Four patterns can be displayed on the screen for adjusting monitor color, brightness, contrast and convergence. The patterns are: Color bars, a cross-hatch, a gray scale, and a dot pattern. By momentarily pressing the select switch, the operator may cycle through the four patterns.

2. MEMORY TEST

For each RAM memory chip: An OK or an NG (no good) appears signaling that the chip is good or bad respectively.

Check sums are displayed for each ROM memory chip. If you have a suspect ROM, refer to your distributor for the correct check sum number.

3. DIP SWITCHES

A functional description of the eight Dip Switches located on the Logic Board Assy. is displayed. Changing any switch will cause an immediate update of the description displayed on the screen.

4. BOOKKEEPING

Selecting this test will display a menu of four functions. Pushing the SELECT button momentarily will move an arrow on the screen. When the arrow points to the desired function, press either start button on the control panel to perform that function.

DISPLAY SCORE COUNTS — A table is shown with 20 categories of score values by thousands (K) and a count associated with each category. The count represents the number of plays in which the score at the end of the game fell into that category. In addition, a high score, low score, and average is shown along with the total number of plays on which the average is based. To clear the table, press either start button and return to the menu by holding down SELECT.

DISPLAY TIME COUNTS — Same as above except each category represents play times in seconds. The high, low, and average are given in minutes and seconds.
DISPLAY ROUND COUNTS — Same as above except each category represents the round in which the games ended.

Note: Each of these tables are independent of the others. Any table may be cleared without affecting the others in any way.
RESET KRULL ELITE — Pressing either start button will reset the Krull Elite table (all time high scores).
Note: There are two high score tables. The Daily Heroes high score table is reset on power up.

5. SWITCH TEST

A colored square is displayed for each player button. Pressing a button causes the appropriate square to change color.
For each coin mechanism, a digit is displayed (initially 0). Inserting a coin into a coin

chute will increment the appropriate value without affecting the coin meter.

Moving the MOVE joystick will display its direction of movement in the upper right corner of the screen. Moving the FIRE joystick will display its direction of movement directly under the MOVE joystick display.

6. SOUND TEST

After selecting this test a count will appear on the screen representing the various sounds that are produced by the game. There will be 28 different sounds produced and the screen count will repeat to 01. Pressing either Start button will suppress all sound output and speed up the count so a particular sound can be sought out and checked.

Note: The count on the screen represents the binary signal code that will be sent to the A6 Sound board through the six sound input lines on the A6J1 connector. When executing the Sound Test sequence, there will be no sounds produced on counts 16 through 21 and 32 through 39. There are no sounds assigned to these numbers. These number assignments are subject to change.

VIII. GENERAL INFORMATION

A. PRINTED CIRCUIT BOARDS ARE DESIGNATED AS FOLLOWS:

A1 Logic Board Assy.

A3 Power Supply Assy.

A6 Sound Board Assy.

A8 Filter Board

B. WIRE COLORS ARE SHOWN AS NUMBERS:

0 Black	5 Green
1 Brown	6 Blue
2 Red	7 Purple
3 Orange	8 Slate
4 Yellow	9 White

For example, 688 is a BLUE- SLATE-SLATE striped wire.

C. FUSES

BOTTOM PANEL

F1	Primary Power	4 Amp SLO-BLO
F2	6.3 VAC	3 Amp SLO-BLO
F3	Monitor	2 Amp SLO-BLO
F4	9 VAC	10 Amp SLO-BLO
F5	15 VAC	1 Amp SLO-BLO

POWER SUPPLY ASSY. (A3)

F11	+5VDC Source		6 ¼ Amp SLO-BLO
F21	Sound Board Assy.	+16VDC	2 Amp SLO-BLO
F31	Sound Board Assy.	+12VDC	¼ Amp SLO-BLO
F32	Sound Board Assy.	-12VDC	¼ Amp SLO-BLO
F41	Coin Meter	+20VDC	1 Amp SLO-BLO

VIII. GENERAL INFORMATION

POWER SUPPLY SPECIFICATIONS

LOCATION	VOLTAGE	PROTECTION
Logic Board Assy.	+5VDC	Voltage adjustable. 6 Amps over-voltage protection and fused for over-current protection.
Sound Board	+16VDC	2 Amps fused for over-current protection. The reference for this circuit is a1N4745A +16VDC Zener controlling the base of an emitter follower pass transistor.
Sound Board	+12VDC -12VDC	100 milliamps fused for over-current protection. The plus and minus 12 volts supplies are the 7812 and 7912 IC regulators respectively.
Coin Meter	+20VDC	Full wave rectified unfiltered voltage, fused for over-current protection.
Coin Chute Lights	+4.5VDC	Full wave rectified unfiltered voltage, fused for over-current protection.
Monitor and Marquee	100VAC or 115VAC, 60HZ	Isolated, fused AC voltage.

IX. THEORY OF OPERATION

INTRODUCTION

The character based graphics system designated GG-III has two main subdivisions. The first subdivision is the Central Processor Unit (CPU) which has three partitions:

a. Microprocessors
b. Memory
c. Input and Output ports (I/O)

The Intel 8088 microprocessor is used and 32K bytes of memory is reserved for programming space and has 5 input ports and 5 output ports. The second subdivision is the video state machine which generates and controls the video signal to the monitor. The state machine has three partitions:

a. System Clock (CLK)
b. Foreground generator (FGND)
c. Background generator (BGND)

The system clock is driven by a 20MHZ crystal, divided down for a 5MHZ dot clock.

All inputs and outputs including the video control and general purpose I/O are memory-mapped, (i.e. everything within the system can be addressed in a single segment of 64K addresses as memory).

The video control unit is divided into an "object-oriented" foreground driver and "character-oriented" background driver. The screen resolution is 256 pixels horizontally, and 240 lines vertically for both foreground and background. The CPU communicates with the foreground driver and background driver by writing data into the designated memory areas in a certain format. The foreground is designed to display moving objects on the screen with a minimum overhead to the processor. The game programs will only have to specify the vertical and horizontal position and the object select number to the foreground driver. The background video supplements the foreground with relatively static figures on the screen. The CPU specifies all the character positions on the screen with desired "character " patterns.

A 5MHZ system clock drives a 9 bit horizontal dot counter and an 8 bit vertical line counter. The horizontal counter counts from 0 to 255 during active scan line and 256 to 317 during horizontal blanking time. When the horizontal counter reaches 317, the horizontal counter resets to 0. At the beginning of the horizontal blanking time (horizontal counter = 256) it increments the vertical counter. The vertical counter counts from 0 to 239 during active vertical scan time and 240 to 255 during vertical blanking time.

The battery backup system supports two battery RAM's that store all of the bookkeeping functions. The battery is maintained at a +3.6V reference by a trickle charge supplied on the logic board regulated by a current limiting resistor. If the AC power to the game is interrupted, the battery allows the RAM's to store the data contained in the Distrubutors table and the Options/Parameters screen.

X. WIRING AND SCHEMATIC DIAGRAMS, PARTS LISTS

TABLE OF CONTENTS

PAGE

LOGIC BOARD ASSY. (A1)
- COMPONENT LOCATION AND PARTS LIST 13
- SCHEMATIC DIAGRAM (SHEET 1 OF 3) 16
- SCHEMATIC DIAGRAM (SHEET 2 OF 3) 18
- SCHEMATIC DIAGRAM (SHEET 3 OF 3) 21

POWER SUPPLY ASSY. (A3)
- COMPONENT LOCATION AND PARTS LIST 24
- SCHEMATIC DIAGRAM 25

SOUND BOARD ASSY. (A6)
- COMPONENT LOCATION AND PARTS LIST 27
- SCHEMATIC DIAGRAM 28

PRIMARY POWER/FILTER BOARD/
INTERCONNECTION DIAGRAM 30

LOGIC BOARD ASSY. (A1), PARTS LIST

MISCELLANEOUS ELECTRONIC COMPONENTS

REFERENCE	DESCRIPTION	PART NO.
Bat. 1	Battery, 3.6V	XO-458
C1-C16	Capacitor, 0.1 UF 50V AX. CR. +80%-20%	XO-230
C25	Capacitor, 100 UF, 25V EL-AX	XO-212
C26	Capacitor, 0.1 UF 50V AX. CR. +80%-20%	XO-230
C27	Capacitor, 100 UF, 25V EL-AX	XO-212
C31-34	Capacitor, 0.1 UF, 50V AX. CR. +80%-20%	XO-230
C51	Capacitor, 100 PF, 100V CMD 5%	XO-198
C52	Capacitor, 0.1 UF, 100V CMD 5%	XO-196
C53	Capacitor, 10 UF, 25V AX. TANT. 10%	XO-127
ALL UNMARKED CAPACITORS	.01 UF, 50V AX. CR. +80%-20%	XO-229
ALL POLARIZED UNMARKED CAPACITORS	10 UF, 25V AX. TANT. 10%	XO-127
D2	Diode, 1N4454	XO-275
D4	Diode, 1N4733A	XO-274
D81	Diode, 1N4148	XO-261
Q1	Transistor, MPS-U45	XO-306
Q2-Q4	Transistor, 2N6044	XO-120
Q81-Q87	Transistor, MPSA70	XO-309
R1-R16	Resistor, 470 OHM, 5% ¼W	XO-35
R25	Resistor, 1K OHM, 5% ¼W	XO-5
R31	Resistor, 10K OHM, 5% ¼W	XO-18
R32-R34	Resistor, 1K OHM, 5% ¼W	XO-5
R37, R38	Resistor, 330 OHM, 5% ¼W	XO-34
R39	Resistor, 130 OHM, 5% ¼W	XO-172
R40	Resistor, 270 OHM, 5% ¼W	XO-68
R41, R42	Resistor, 510 OHM, 5% ¼W	XO-25
R43	Resistor, 130 OHM, 5% ¼W	XO-172
R44, R45	Resistor, 1K OHM, 5% ¼W	XO-5
R51, R52	Resistor, 330 OHM, 5% ¼W	XO-34
R53, R54, R56	Resistor, 1K OHM, 5% ¼W	XO-5
R57, R58	Resistor, 560 OHM, 5% ¼W	XO-36
R59-R61	Resistor, 1K OHM, 5% ¼W	XO-5
R63, R64	Resistor, 1K OHM, 5% ¼W	XO-5
R70	Resistor, 1K OHM, 5% ¼W	XO-5
R73, R74	Resistor, 1K OHM, 5% ¼W	XO-5
R76-R80	Resistor, 1K OHM, 5% ¼W	XO-5
R81	Resistor, 820 OHM, 5% ¼W	XO-174
R82	Resistor, 100 OHM, 5% ¼W	XO-28
R83, R84	Resistor, 15 OHM, 5% ¼W	XO-171
R85	Resistor, 180 OHM, 5% ¼W	XO-24
R86, R87	Resistor, 15 OHM, 5% ¼W	XO-171
R88	Resistor, 180 OHM, 5% ¼W	XO-24
R89, R90	Resistor, 15 OHM, 5% ¼W	XO-171
R91	Resistor, 180 OHM, 5% ¼W	XO-24
R92	Resistor, 1K OHM, 5% ¼W	XO-5
R93	Resistor, 2K OHM, 5% ¼W	XO-14
R94	Resistor, 1K OHM, 5% ¼W	XO-5
R95	Resistor, 470 OHM, 5% ¼W	XO-35
R96	Resistor, 240 OHM, 5% ¼W	XO-173
R97	Resistor, 2K OHM, 5% ¼W	XO-14
R98	Resistor, 1K OHM, 5% ¼W	XO-5
R99	Resistor, 470 OHM, 5% ¼W	XO-35
R100	Resistor, 240 OHM, 5% ¼W	XO-173
R101	Resistor, 2K OHM, 5% ¼W	XO-14
R102	Resistor, 1K OHM, 5% ¼W	XO-5
R103	Resistor, 470 OHM, 5% ¼W	XO-35
R104	Resistor, 240 OHM, 5% ¼W	XO-173
SIP 1, SIP 2, SIP 4	Resistor, Dip, 4.7K, 9 Pin	XO-492
SIP 71, SIP 72, SIP 73	Resistor, Dip, 1K, 9 Pin	XO-493
X-TAL 41	Crystal, 15 MHZ	XO-482
XTAL 51	Crystal 20 MHZ	XO-494
	Dip Switch	XO-505
	20 Pin Dip Socket	XO-491
	22 Pin Dip Socket	XO-467
	24 Pin Dip Socket	XO-529
	28 Pin Dip Socket	XO-536
	40 Pin Dip Socket	XO-530

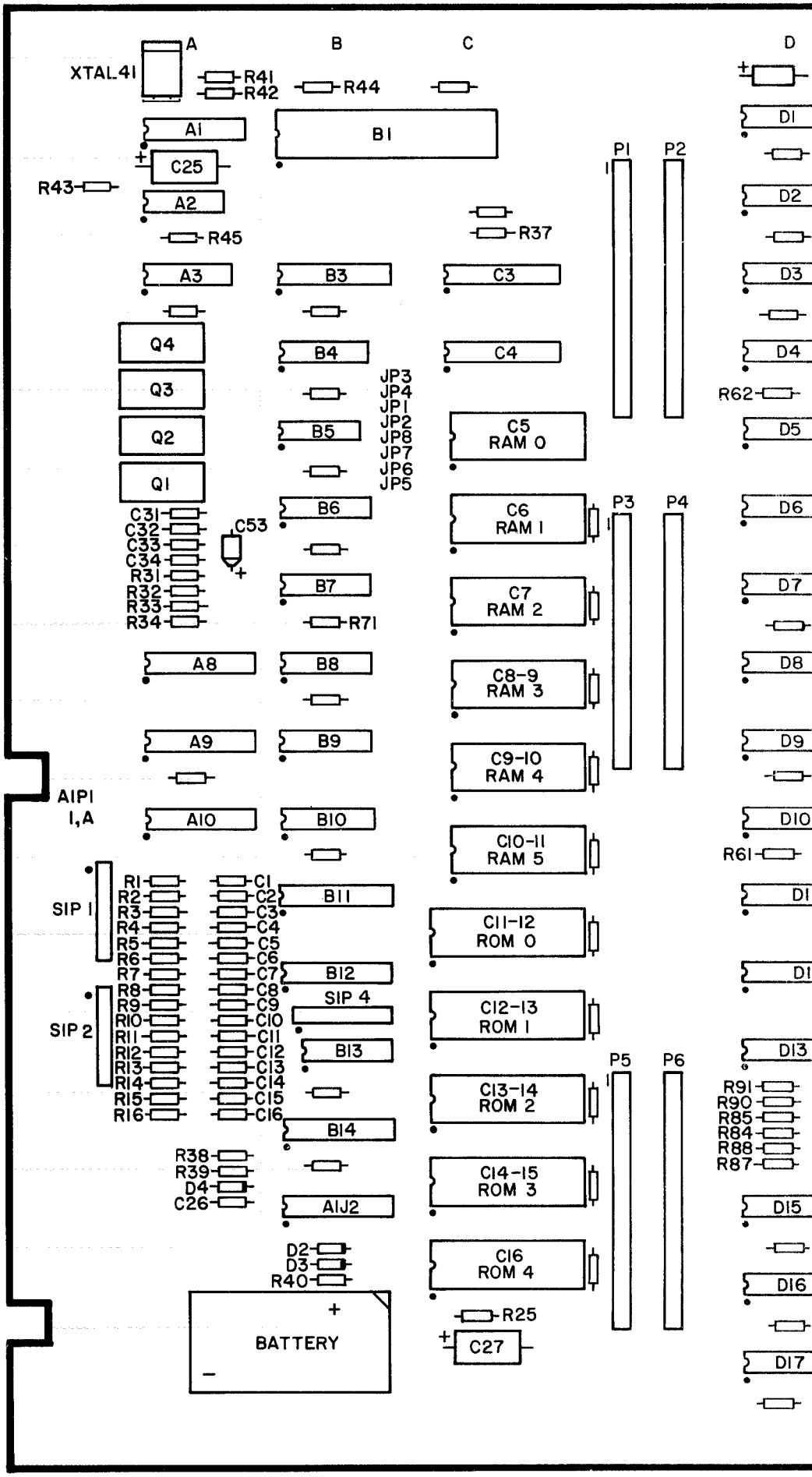

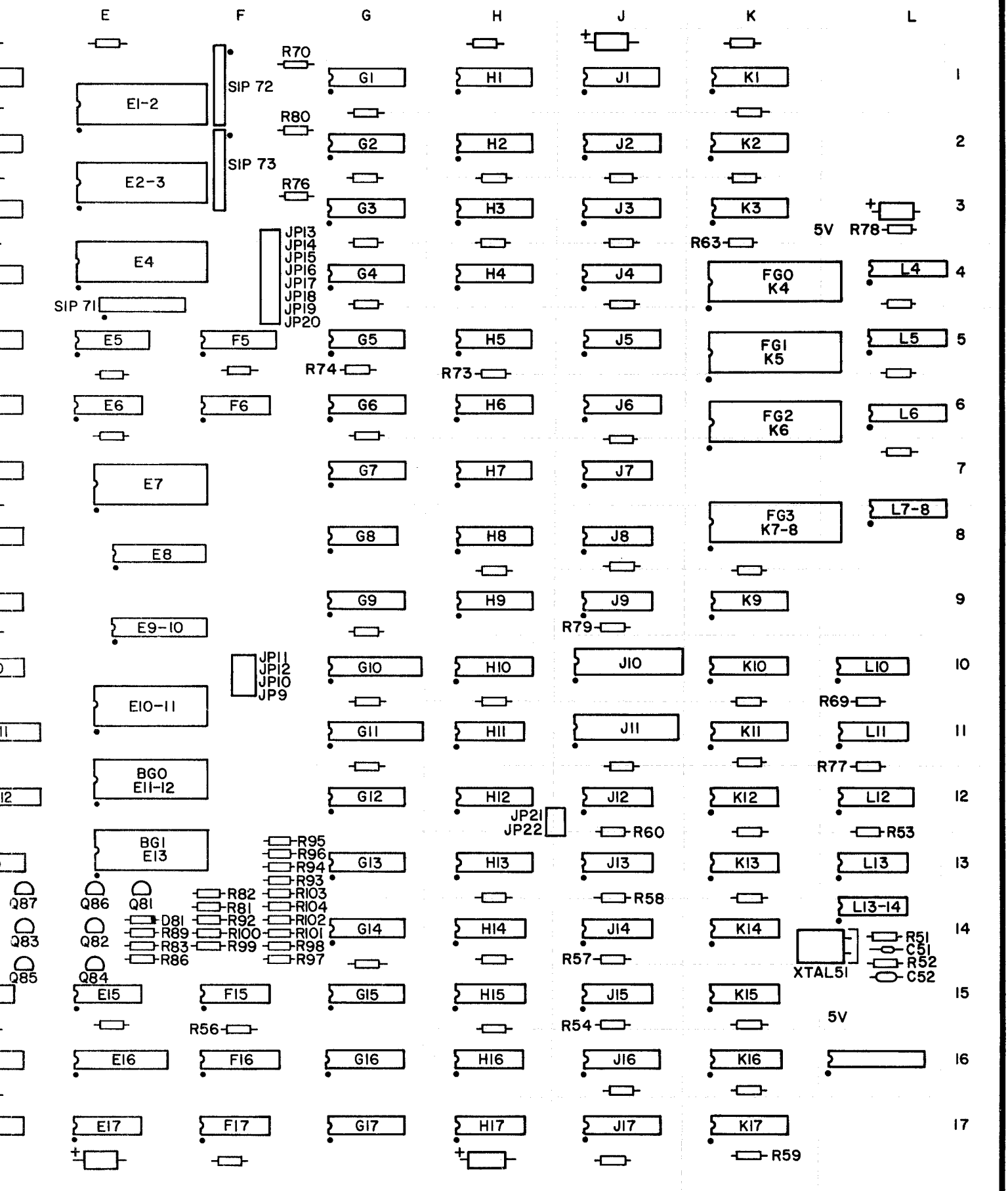
E
F
G
H
J
K
L
R70
SIP 72
E1-2
R80
SIP 73
E2-3
R76
JP13
JP14
JP15
JP16
JP17
JP18
JP19
JP20
E4
SIP 71
E5
F5
R74
G5
R73
H5
J5
FG1
K5
L5
E6
F6
G6
H6
J6
FG2
K6
L6
E7
G7
H7
J7
FG3
K7-8
L7-8
E8
G8
H8
J8
E9-10
G9
H9
J9
R79
K9
JP11
JP12
JP10
JP9
E10-11
G10
H10
J10
K10
L10
R69
G11
H11
J11
K11
L11
R77
BG0
E11-12
G12
H12
J12
K12
L12
JP21
JP22
R60
R53
BG1
E13
R95
R96
R94
R93
G13
H13
J13
K13
L13
R58
L13-14
Q87
Q86
Q81
R82
R81
R103
R104
D81
R89
R92
R102
R101
R83
R99
R98
R86
R97
G14
H14
J14
K14
R51
C51
R52
C52
XTAL51
Q83
Q82
Q85
Q84
R57
E15
F15
G15
H15
J15
K15
5V
R56
R54
E16
F16
G16
H16
J16
K16
E17
F17
G17
H17
J17
K17
R59
1
2
3
4
5
6
7
8
9
10
11
12
13
14
15
16
17
5V
R78
R63

LOGIC BOARD ASSY. (A1), PARTS LIST (CONT.)

INTEGRATED CIRCUITS

REFERENCE	DESCRIPTION	PART NO.
	Logic Board Assy.	MA-456
A1	8284 CLK Driver	XO-478
A2	74LS02 Quad 2-input "NOR" gate	XO-428
A3	74161 Synchronous 4-bit counter	XO-192
A8, A9, A10	74LS377 Octal "D" Flip Flop	XO-97
B1	8088 CPU	XO-490
B3	74LS373 Octal D-type flip flop	XO-445
B4	74LS367 Hex 3-state buffer	XO-444
B5	74LS08 Quad 2-input "AND" gate	XO-86
B6	74HC138 Decoder/demultiplexer	XO-190
B7	74LS139 Dual 1 of 4 decoder	XO-419
B8	74S138 1 of 8 decoder	XO-113
B9, B10	74LS138 1 of 8 decoder	XO-437
B11, B12, B14	74LS240 Octal Buffer/line driver	XO-91
C3	74LS373 Octal D-type flip flop	XO-445
C4	74LS245 Octal Bus transceiver	XO-79
C5	RAM Ø 6116LP-4	XO-191
C6	RAM 1 6116LP-4	XO-191
C7	ROM A 2732A 4K x 8 EPROM	XO-485
C9-C10	ROM B 2732A 4K x 8 EPROM	XO-485
C11-12	ROM Ø 2764 8K x 8 EPROM	XO-489
C12-13	ROM 1 2764 8K x 8 EPROM	XO-489
C13-14	ROM 2 2764 8K x 8 EPROM	XO-489
C14-15	ROM 3 2764 8K x 8 EPROM	XO-489
C16	ROM 4 2764 8K x 8 EPROM	XO-489
D1	74LS139 Dual 1 of 4 Decoder	XO-419
D2, D3, D4, D5, D6, D7, D8, D9,		
D10	74157 Quad 2-input multiplexer	XO-114
D11	74LS374 Octal D-type flip flop	XO-96
D12	74LS244 Octal buffer/line driver	XO-117
D13	74LS157 Quad 2-input multiplexer	XO-390
D15	74LS86 Quad 2-input exclusive "OR" gate	XO-435
D16	74LS283 4-bit binary full adder	XO-95
D17	74S161 Synchronous presettable binary counter	XO-488
E1-2, E2-3, E4	93419 64 x 9 bipolar RAM	XO-99
E5	74LS283 4-bit binary full adder	XO-95
E6	74LS30 8-input "NAND"	XO-432
E7	4801 1K x 8 RAM	XO-193
E8, E9-10	74LS245 Octal Bus Transceiver	XO-79
E10-11	4801 1K x 8 RAM	XO-193
E11-12	2128 (BGØ) RAM	XO-195
E13	2128 (BG1) RAM	XO-195
E15	74LS86 Quad 2-input exclusive "OR" gate	XO-435
E16	74LS273 8-bit register	XO-94
E17	74LS20 Dual 4-input "NAND" gate	XO-430
F5	74LS283 4-bit binary full adder	XO-95
F6	74LS32 Quad 2-input "OR" gate	XO-433
F15	74LS04 Hex inverter	XO-418
F16	74S161 Synchronous presettable binary counter	XO-488
F17	74LS86 Quad 2-input exclusive "OR" gate	XO-435
G1, G2, G3, G4, G5	74LS157 Quad 2-input multiplexer	XO-390
G6	74LS161 Synchronous presettable binary counter	XO-440
G7	74157 Quad 2-input multiplexer	XO-114
G8	74LS74 Dual D-type flip flop	XO-434
G9	74S157 Quad 2-input multiplexer	XO-124
G10	74LS245 Octal bus transceiver	XO-79
G11	74LS374 Octal D-type flip flop	XO-96
G12	74LS157 Quad 2-input multiplexer	XO-390
G13, G14, G15	7489 64-bit RAM	XO-88
G16, G17	74LS174 Hex D flip flop	XO-442
H1, H2, H3, H4	74S189 64-bit RAM	XO-89
H5, H6,	74S161 Synchronous presettable binary counter	XO-488
H7, H8, H9, H10	74LS157 Quad 2-input multiplexer	XO-390
H11	74LS260 Dual 5-input "NOR" gate	XO-93
H12	74LS298 Quad 2-port register	XO-118
H13	74LS157 Quad 2-input multiplexer	XO-390
H14	74LS00 Quad 2-input "NAND" gate	XO-427
H15	74LS30 8 input "NAND" gate	XO-432
H16, H17	74LS86 Dual 2-input exclusive "OR" gate	XO-435
J1, J2, J3, J4, J5, J6	74S189 64-bit RAM	XO-89
J7	74LS04 Hex inverter	XO-418
J8	74LS32 Quad 2-input "OR" gate	XO-433
J9	7408 Quad 2-input "AND" gate	XO-404
J10, J11	93422 256 x 2 bipolar RAM	XO-100
J12	74LS02 Quad 2-input "NOR" gate	XO-428
J13	74LS74 Dual D-type flip flop	XO-434
J14	7407 Hex buffer/driver	XO-384
J15	74LS30 8 input "NAND" gate	XO-432
J16, J17	74S161 Synchronous presettable binary counter	XO-488
K1, K2, K3	74LS379 Quad D-type flip flop	XO-98
K4	FG0 2764-3 8K x 8 EPROM	XO-489
K5	FG1 2764-3 8K x 8 EPROM	XO-489
K6	FG2 2764-3 8K x 8 EPROM	XO-489
K7-8	FG3 2764-3 8K x 8 EPROM	XO-489
K9, K10, K11	74LS157 Quad 2-input multiplexer	XO-390
K12	74LS260 Dual 5-input "NOR" gate	XO-93
K13	74LS32 Quad 2-input "OR" gate	XO-433
K14	74LS08 Quad 2-input "AND" gate	XO-86
K15	74S04 Hex inverter	XO-400
K16	74LS20 Dual 4-input "NAND" gate	XO-430
K17	74S161 Synchronous presettable binary counter	XO-488
L4, L5, L6, L7-8	74LS166 8-bit shift register	XO-391
L10	74LS74 Dual flip flop	XO-434
L11	74LS20 Dual 4-input "NAND" gate	XO-430
L12	74LS161 Synchronous presettable binary counter	XO-440
L13	74S74 Dual D-type pos. edge trig. flip flop (T. I. only)	XO-87
L13-14	74S04 Hex inverter	XO-400

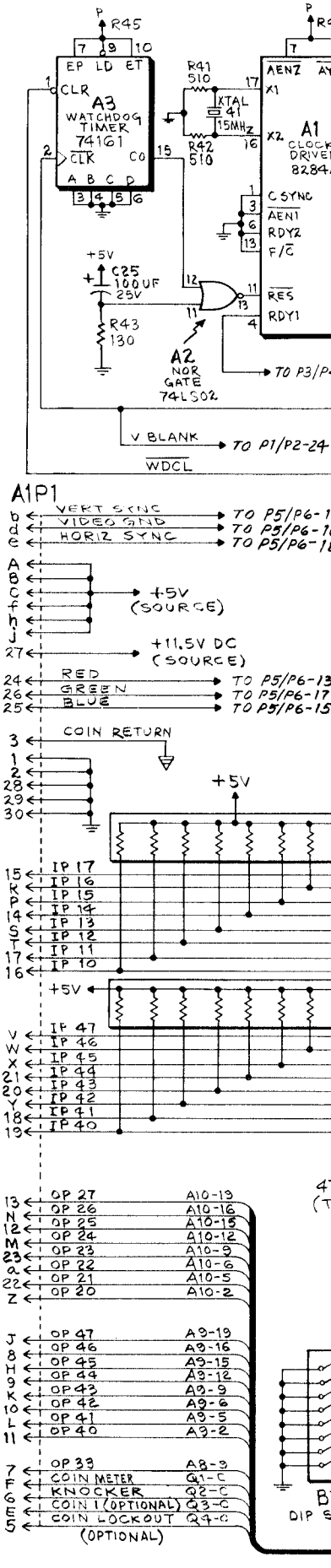

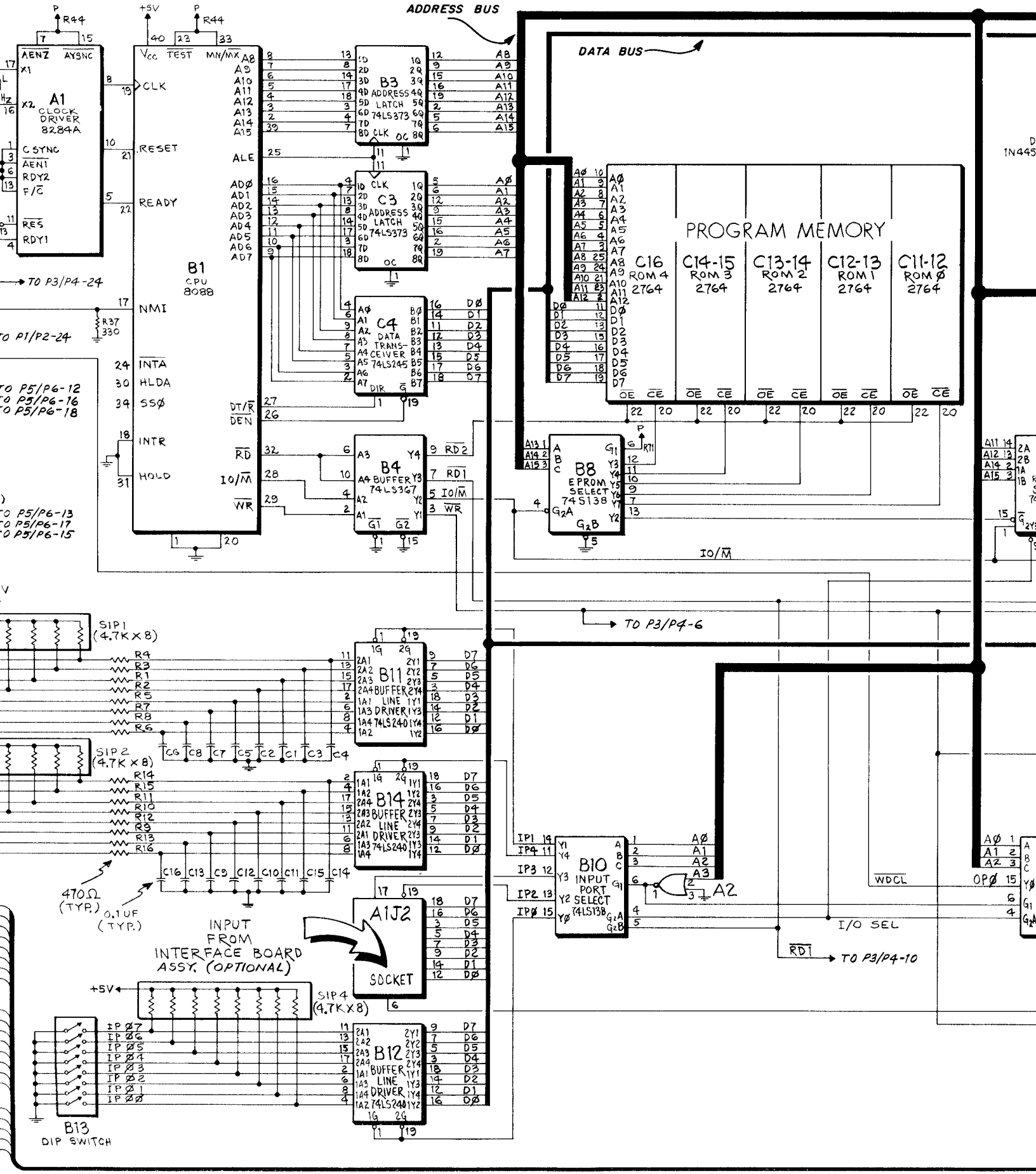
ADDRESS BUS
DATA BUS
A1 CLOCK DRIVER 8284A
B1 CPU 8088
B3 ADDRESS LATCH 74LS373
C3 ADDRESS LATCH 74LS373
C4 DATA TRANSCEIVER 74LS245
B4 BUFFER 74LS367
PROGRAM MEMORY
C16 ROM 4 2764
C14-15 ROM 3 2764
C13-14 ROM 2 2764
C12-13 ROM 1 2764
C11-12 ROM 0 2764
B8 EPROM SELECT 74S138
TO P3/P4-6
IO/M
SIP1 (4.7K X 8)
SIP2 (4.7K X 8)
B11 BUFFER LINE DRIVER 74LS240
B14 BUFFER LINE DRIVER 74LS240
B10 INPUT PORT SELECT 74LS138
A2
WDCL
I/O SEL
RD1
TO P3/P4-10
470Ω (TYP.)
0.1 UF (TYP.)
INPUT FROM INTERFACE BOARD ASSY. (OPTIONAL)
A1J2 SOCKET
SIP4 (4.7K X 8)
B12 BUFFER LINE DRIVER 74LS240
B13 DIP SWITCH
TO P3/P4-24
TO P1/P2-24
TO P5/P6-12
TO P5/P6-16
TO P5/P6-18
TO P5/P6-13
TO P5/P6-17
TO P5/P6-15

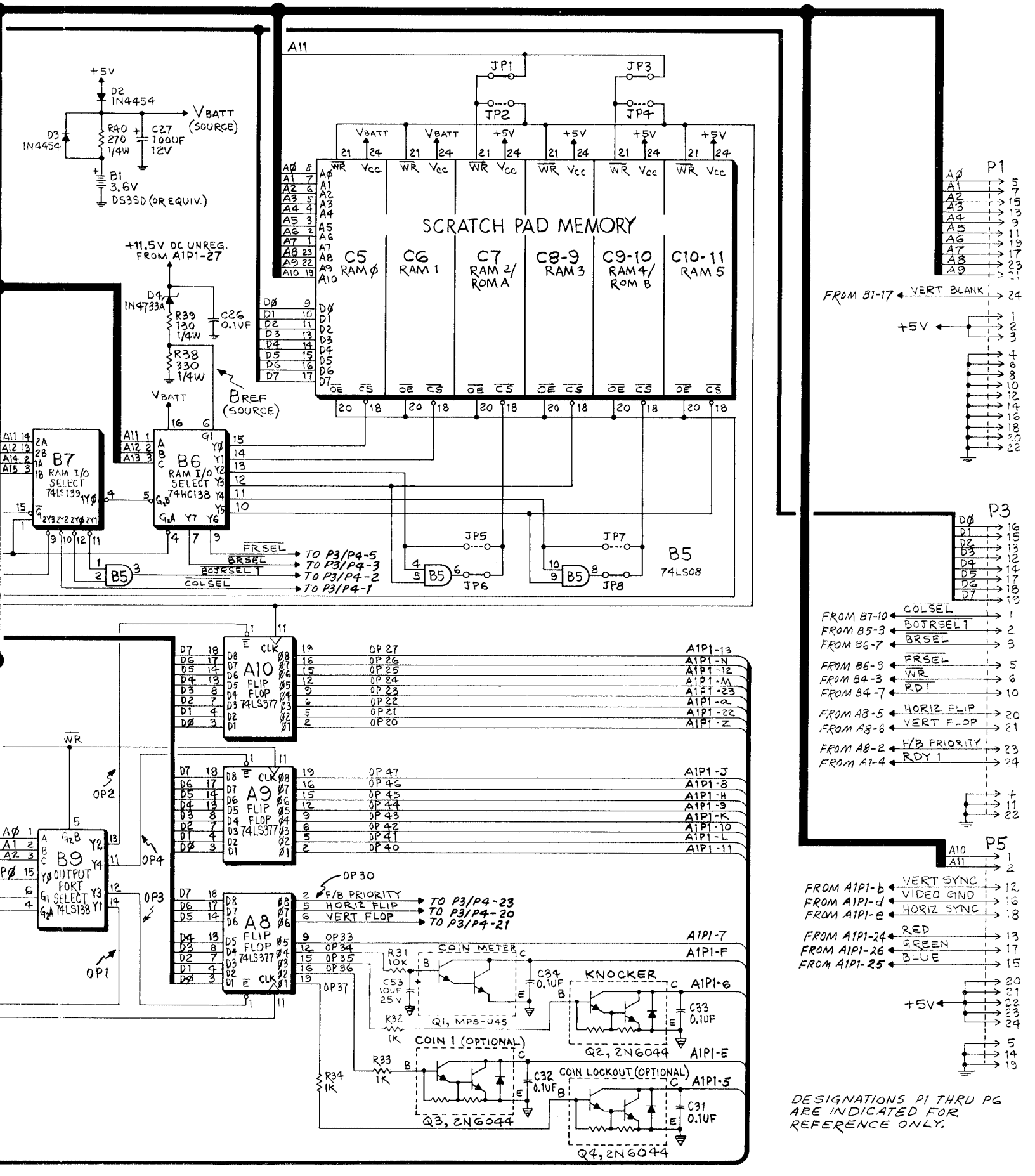

LOGIC BOARD ASSY. (A1), SCHEMATIC DIAGRAM, SHEET 1 OF 3

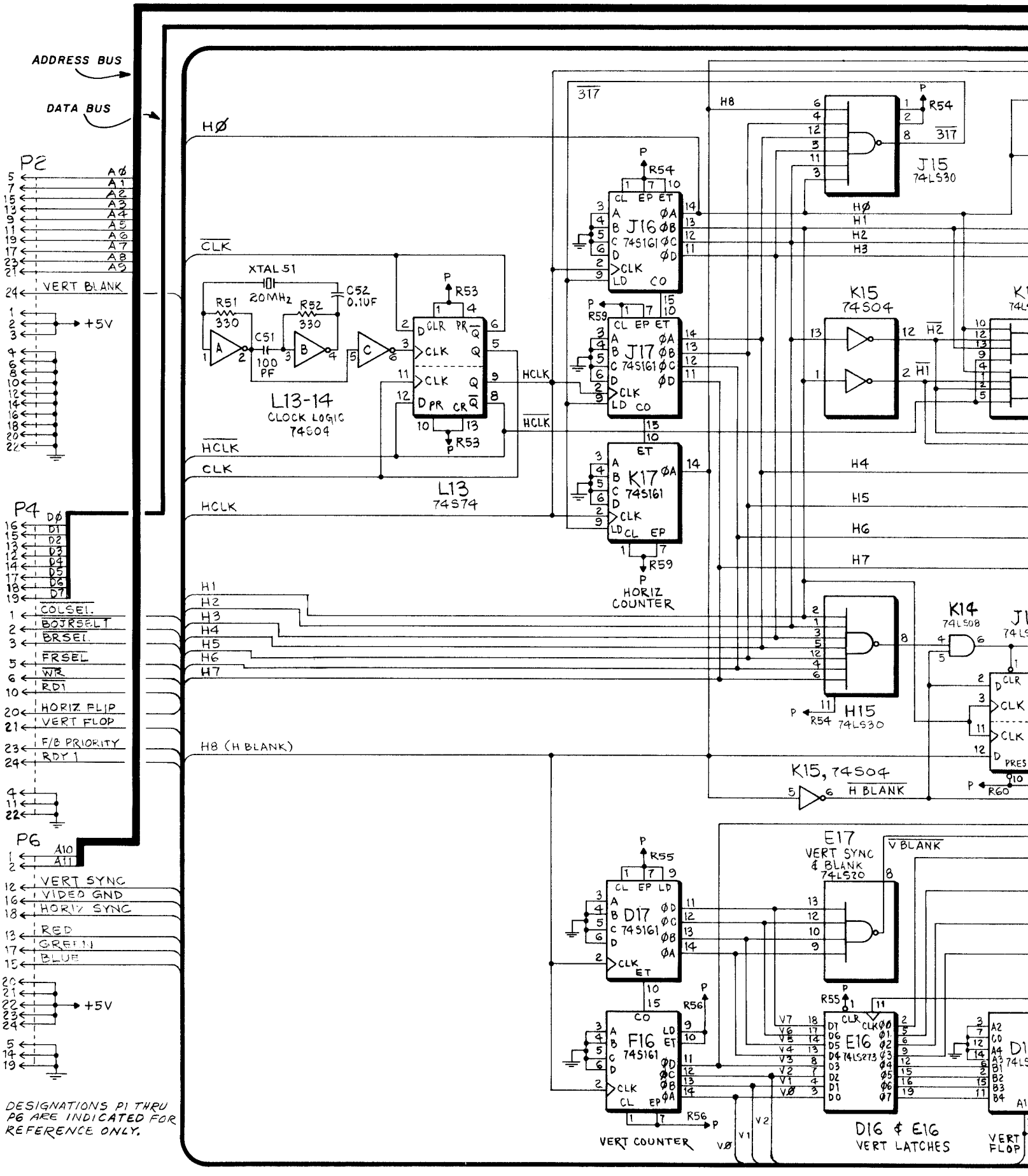
ADDRESS BUS
DATA BUS
P2
VERT BLANK
+5V
P4
COLSEL.
BOJRSELT
BRSEL.
FRSEL
WR
RD1
HORIZ FLIP
VERT FLOP
F/B PRIORITY
RDY 1
P6
VERT SYNC
VIDEO GND
HORIZ SYNC
RED
GREEN
BLUE
+5V
DESIGNATIONS P1 THRU P6 ARE INDICATED FOR REFERENCE ONLY.
HØ
CLK
XTAL 51
20MHz
C52 0.1UF
R51 330
R52 330
C51 100 PF
L13-14
CLOCK LOGIC
74S04
L13
74S74
HCLK
H1
H2
H3
H4
H5
H6
H7
H8 (H BLANK)
317
J15
74LS30
J16
74S161
J17
74S161
K17
74S161
HORIZ COUNTER
K15
74S04
H15
74LS30
K14
74LS08
K15, 74S04
H BLANK
D17
74S161
F16
74S161
VERT COUNTER
E17
VERT SYNC & BLANK
74LS20
V BLANK
E16
74LS273
D16 & E16
VERT LATCHES
VERT FLOP

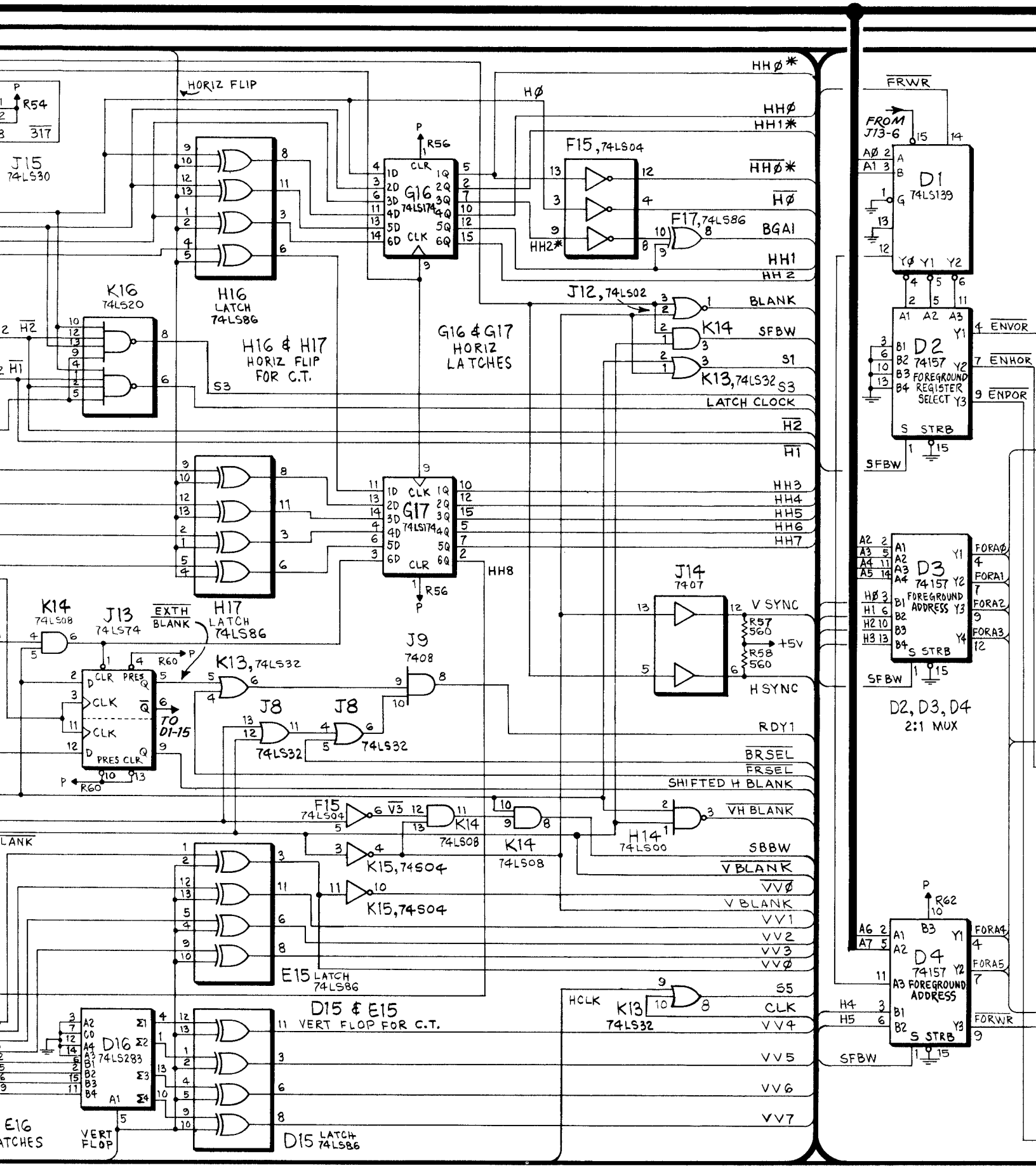
HORIZ FLIP
J15
74LS30
R54
317
K16
74LS20
H16
LATCH
74LS86
H16 & H17
HORIZ FLIP
FOR C.T.
G16
74LS174
R56
F15, 74LS04
F17, 74LS86
G16 & G17
HORIZ
LATCHES
J12, 74LS02
K14
K13, 74LS32
G17
74LS174
H17
LATCH
74LS86
K14
74LS08
J13
74LS74
EXTH
BLANK
R60
TO
D1-15
K13, 74LS32
J9
7408
J8
74LS32
J14
7407
V SYNC
R57
560
+5V
R58
560
H SYNC
RDY1
BRSEL
FRSEL
SHIFTED H BLANK
VH BLANK
H14
74LS00
SBBW
V BLANK
VVØ
VV1
VV2
VV3
VVØ
S5
CLK
VV4
VV5
VV6
VV7
HCLK
K13
74LS32
F15
74LS04
K14
74LS08
K15, 74S04
E15 LATCH
74LS86
D15 & E15
VERT FLOP FOR C.T.
D16
74LS283
VERT
FLOP
D15 LATCH
74LS86
E16
ATCHES
HHØ*
HHØ
HH1*
HHØ*
HØ
BGA1
HH1
HH2
BLANK
SFBW
S1
S3
LATCH CLOCK
H2
H1
HH3
HH4
HH5
HH6
HH7
HH8
FRWR
FROM
J13-6
D1
74LS139
D2
74157
FOREGROUND
REGISTER
SELECT
ENVOR
ENHOR
ENDOR
D3
74157
FOREGROUND
ADDRESS
FORAØ
FORA1
FORA2
FORA3
D2, D3, D4
2:1 MUX
D4
74157
FOREGROUND
ADDRESS
FORA4
FORA5
FORWR
H4
H5
SFBW

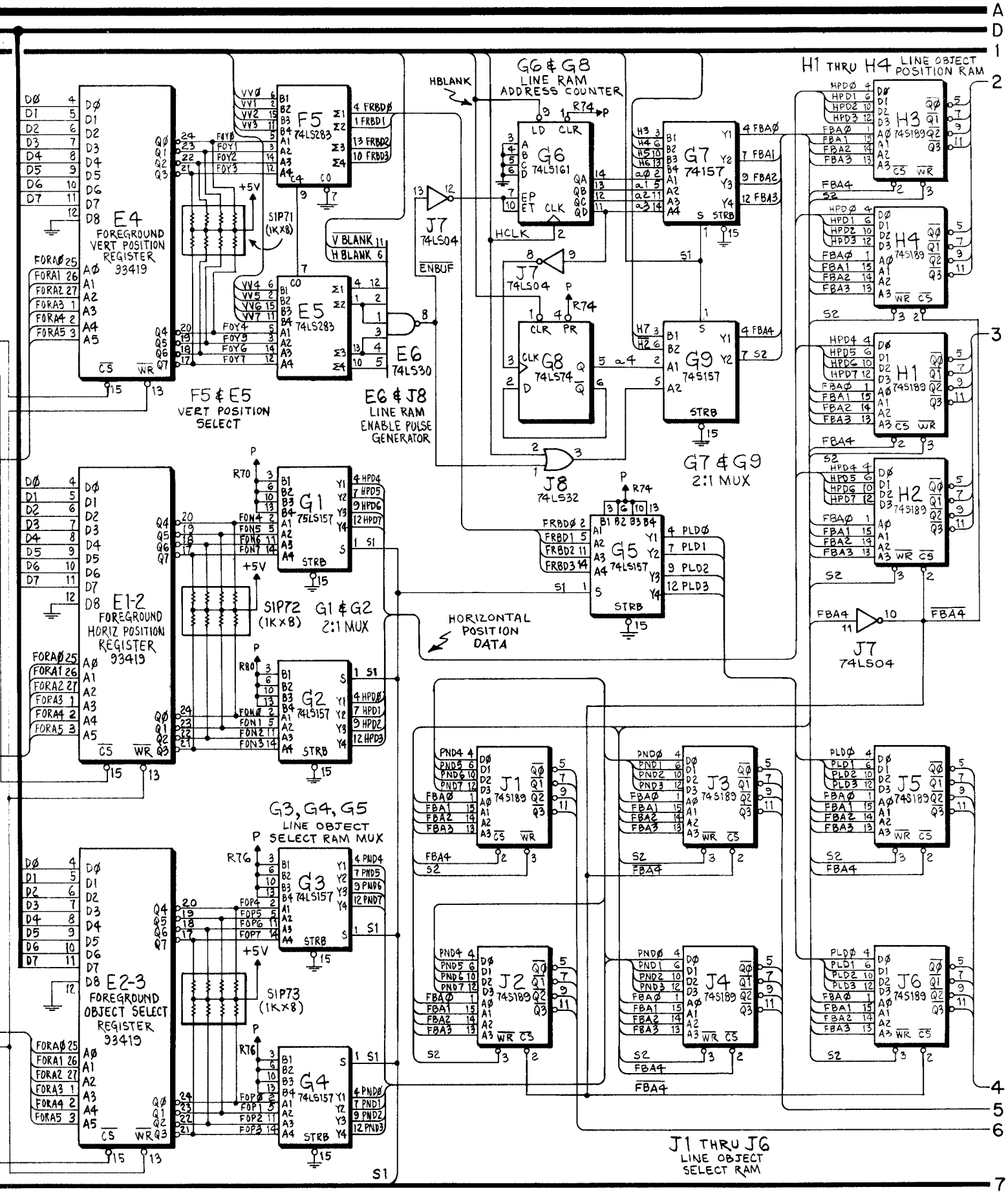

LOGIC BOARD ASSY. (A1), SCHEMATIC DIAGRAM, SHEET 2 OF 3

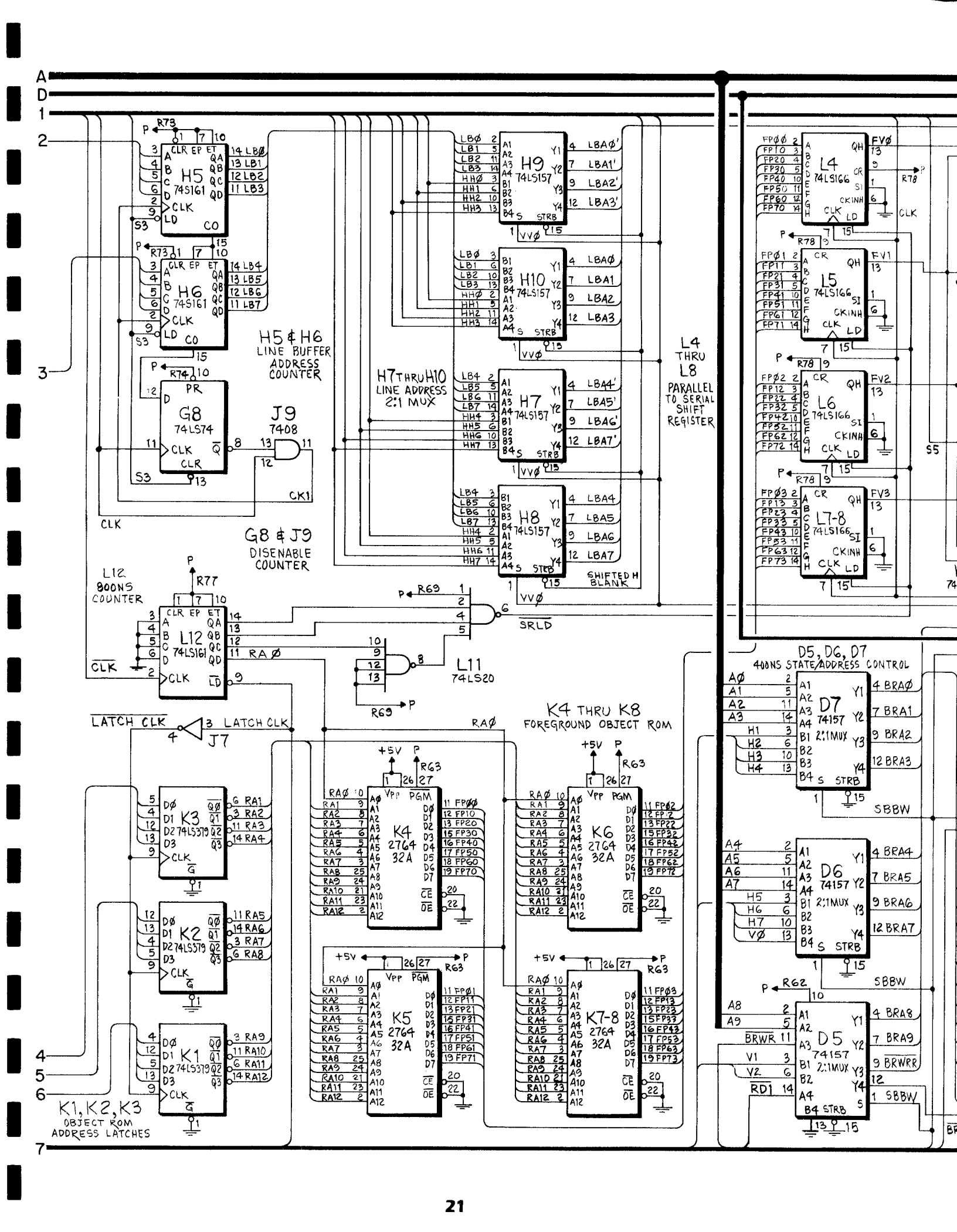
H5 74S161
H6 74S161
H5 & H6 LINE BUFFER ADDRESS COUNTER
G8 74LS74
J9 7408
G8 & J9 DISENABLE COUNTER
H7 THRU H10 LINE ADDRESS 2:1 MUX
H9 74LS157
H10 74LS157
H7 74LS157
H8 74LS157
L4 THRU L8 PARALLEL TO SERIAL SHIFT REGISTER
L4 74LS166
L5 74LS166
L6 74LS166
L7-8 74LS166
SHIFTED H BLANK
L12 800NS COUNTER
L12 74LS161
L11 74LS20
SRLD
LATCH CLK
J7
K1, K2, K3 OBJECT ROM ADDRESS LATCHES
K1 74LS379
K2 74LS379
K3 74LS379
K4 THRU K8 FOREGROUND OBJECT ROM
K4 2764 32A
K5 2764 32A
K6 2764 32A
K7-8 2764 32A
D5, D6, D7 400NS STATE/ADDRESS CONTROL
D7 74157 2:1MUX
D6 74157 2:1MUX
D5 74157 2:1MUX
SBBW
BRWR
RD1

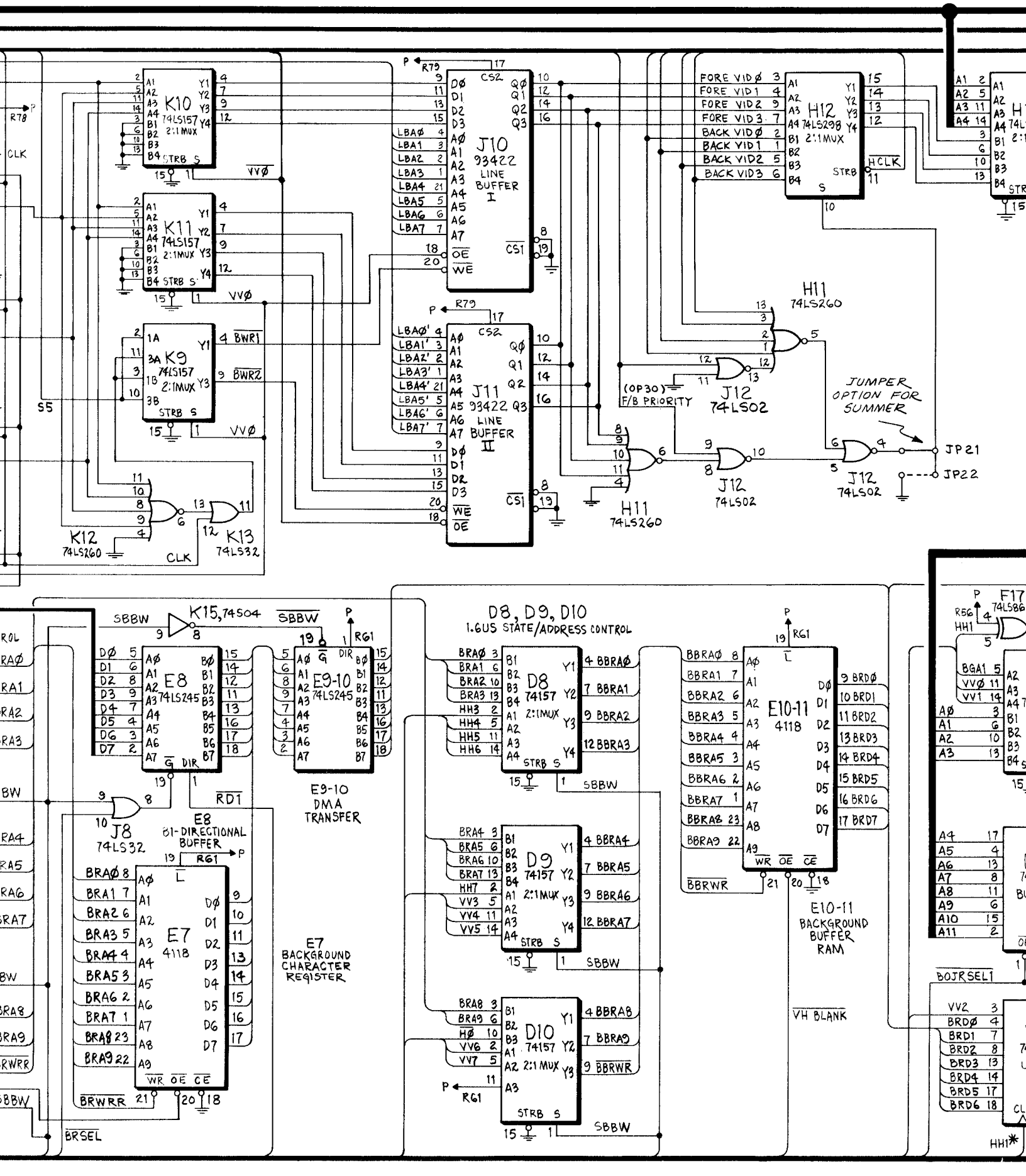
K10 74LS157 2:1MUX
K11 74LS157 2:1MUX
K9 74LS157 2:1MUX
K12 74LS260
K13 74LS32
J10 93422 LINE BUFFER I
J11 93422 LINE BUFFER II
H12 74LS298 2:1MUX
H11 74LS260
J12 74LS02
FORE VID Ø
FORE VID 1
FORE VID 2
FORE VID 3
BACK VID Ø
BACK VID 1
BACK VID 2
BACK VID 3
HCLK
VVØ
BWR1
BWR2
S5
(OP30) F/B PRIORITY
JUMPER OPTION FOR SUMMER
JP21
JP22
K15,74S04
SBBW
E8 74LS245
E9-10 74LS245
E9-10 DMA TRANSFER
J8 74LS32
E8 BI-DIRECTIONAL BUFFER
RD1
E7 4118
E7 BACKGROUND CHARACTER REGISTER
BRSEL
BRWRR
D8, D9, D10
1.6US STATE/ADDRESS CONTROL
D8 74157 2:1MUX
D9 74157 2:1MUX
D10 74157 2:1MUX
E10-11 4118
E10-11 BACKGROUND BUFFER RAM
BBRWR
VH BLANK
BOJRSEL1
F17 74LS86
HH1*

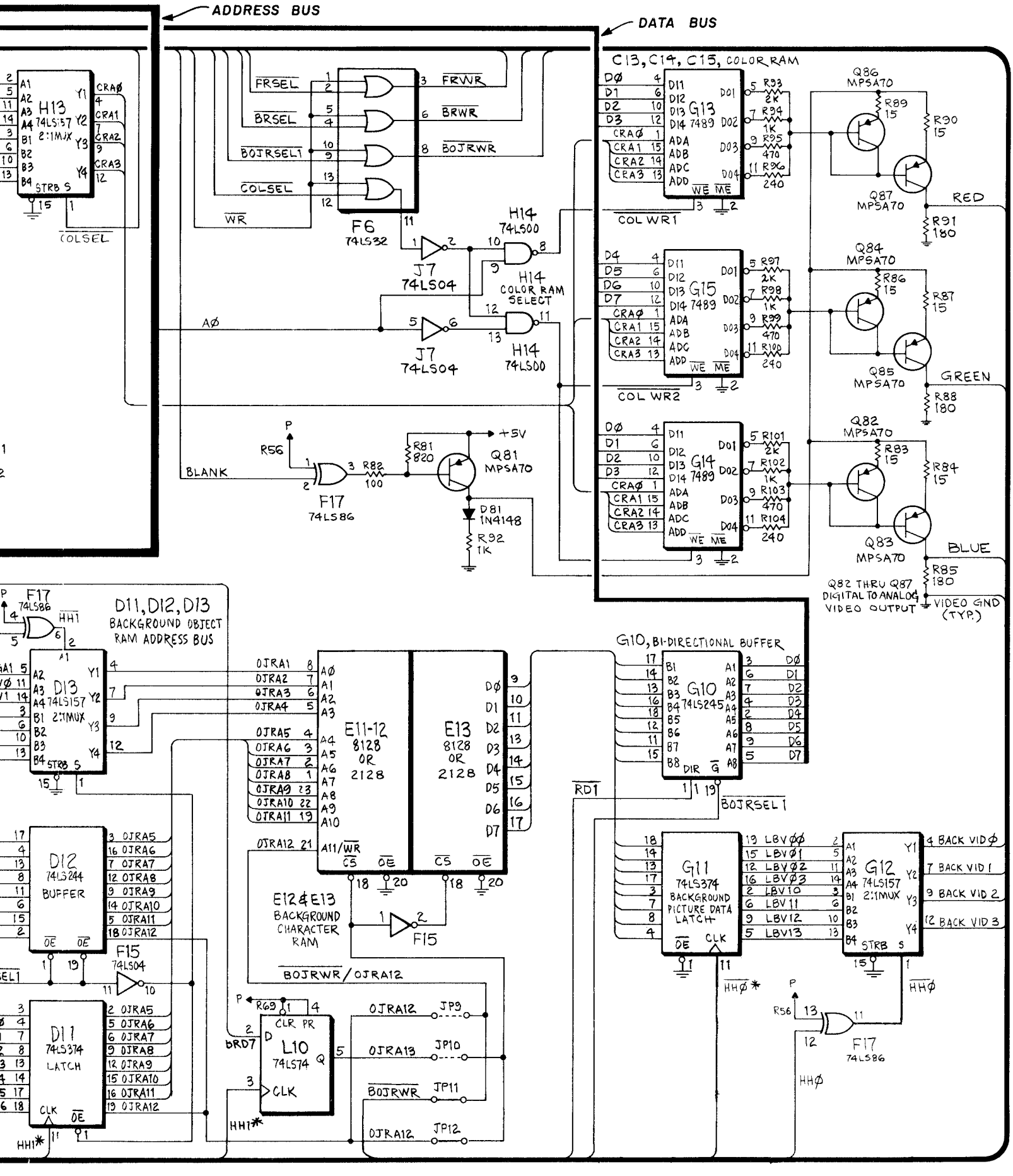

LOGIC BOARD ASSY. (A1), SCHEMATIC DIAGRAM, SHEET 3 OF 3

X. WIRING AND SCHEMATIC DIAGRAMS, PARTS LISTS

POWER SUPPLY ASSY. (A3), COMPONENT LOCATION

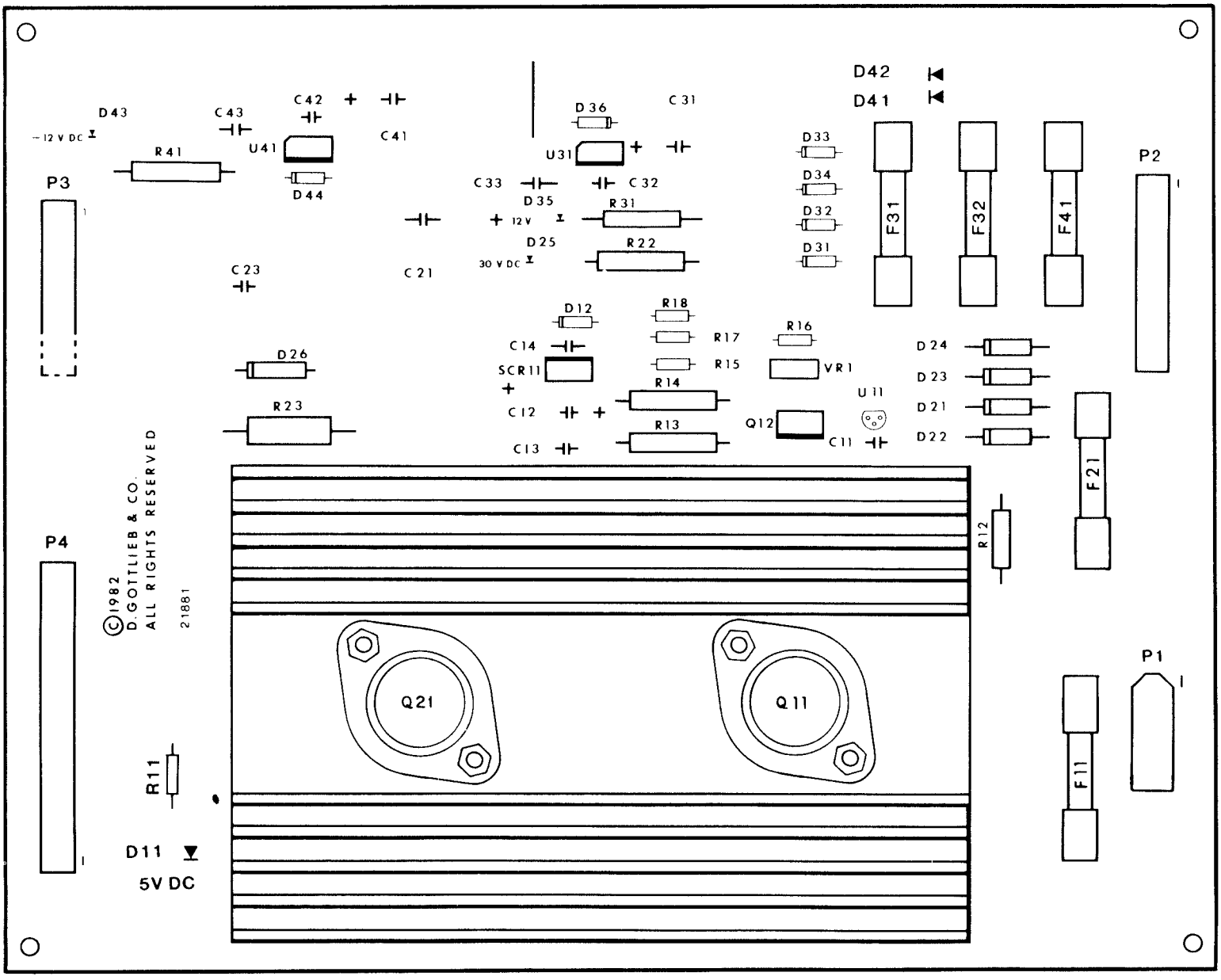

POWER SUPPLY ASSY. (A3), PARTS LIST

REFERENCE	DESCRIPTION	PART NO.
	Power Supply Assy.	MA-492
C11, C32, C42	Capacitor, .01 mfd, 50V	XO-229
C12	Capacitor, 100UF, 16V	XO-235
C13, C23	Capacitor, 0.1UF, 100V	XO-234
C14, C33, C43	Capacitor, 0.2UF, 16V	XO-205
C21	Capacitor, 2200UF, 75V	XO-132
C31, C41	Capacitor, 470UF, 35V	XO-284
D11, D25		
D35, D43	Diode, Light Emitting MV-5752	XO-270
D12	Diode, Zener, 5.6V, 5%, 1W, 1N4734A	XO-255
D21-D24	Diode, 1N5401	XO-263
D26	Diode, Zener, 16V, 5%, 1W, 1N4745A	XO-620
D31-D34, D36		
D41, D42, D44	Diode, 1N4004	XO-254
F11	Fuse, 6¼ AMP SLO-BLO	EL-8
F21	Fuse, 2 AMP SLO-BLO	EL-7
F31, F32	Fuse, ¼ AMP SLO-BLO	EL-5
F41	Fuse, 1 AMP SLO-BLO	EL-6
P1	Connector, 4 PIN	PS-87
P2	Connector, 10 PIN	XO-531
P3	Connector, 7 PIN	XO-526
P4	Connector, 16 PIN	XO-372
Q11	Transistor, PNP, 2N5879	XO-323
Q12	Transistor, NPN, TIP31B	XO-641
Q21	Transistor, NPN, 2N3055	XO-301
R11	Resistor, 470 OHM, 5% ½W	XO-55
R12	Resistor, 100 OHM, 5% 1W	XO-137
R13, R14	Resistor, 12 OHM, 5% 2W	XO-138
R15	Resistor, 200 OHM, 5% ¼W	XO-143
R16	Resistor, 180 OHM, 5% ¼W	XO-24
R17	Resistor, 100 OHM, 5% ¼W	XO-28
R18	Resistor, 20 OHM, 5% ¼W	XO-29
R22	Resistor, 1.8KOHM, 5% 2W	XO-135
R23	Resistor, 1KOHM, 5% 2W	XO-627
R31, R41	Resistor, 750 OHM, 5% 1W	XO-136
SCR11	Silicon Controlled Rectifier	XO-131
U11	Diode, Programmable Zener TL431	XO-272
U31	Voltage Regulator +12V, LM 340T	XO-473
U41	Voltage Regulator -12V, LM 320	XO-130
VR1	Potentiometer, 100 OHM	XO-134

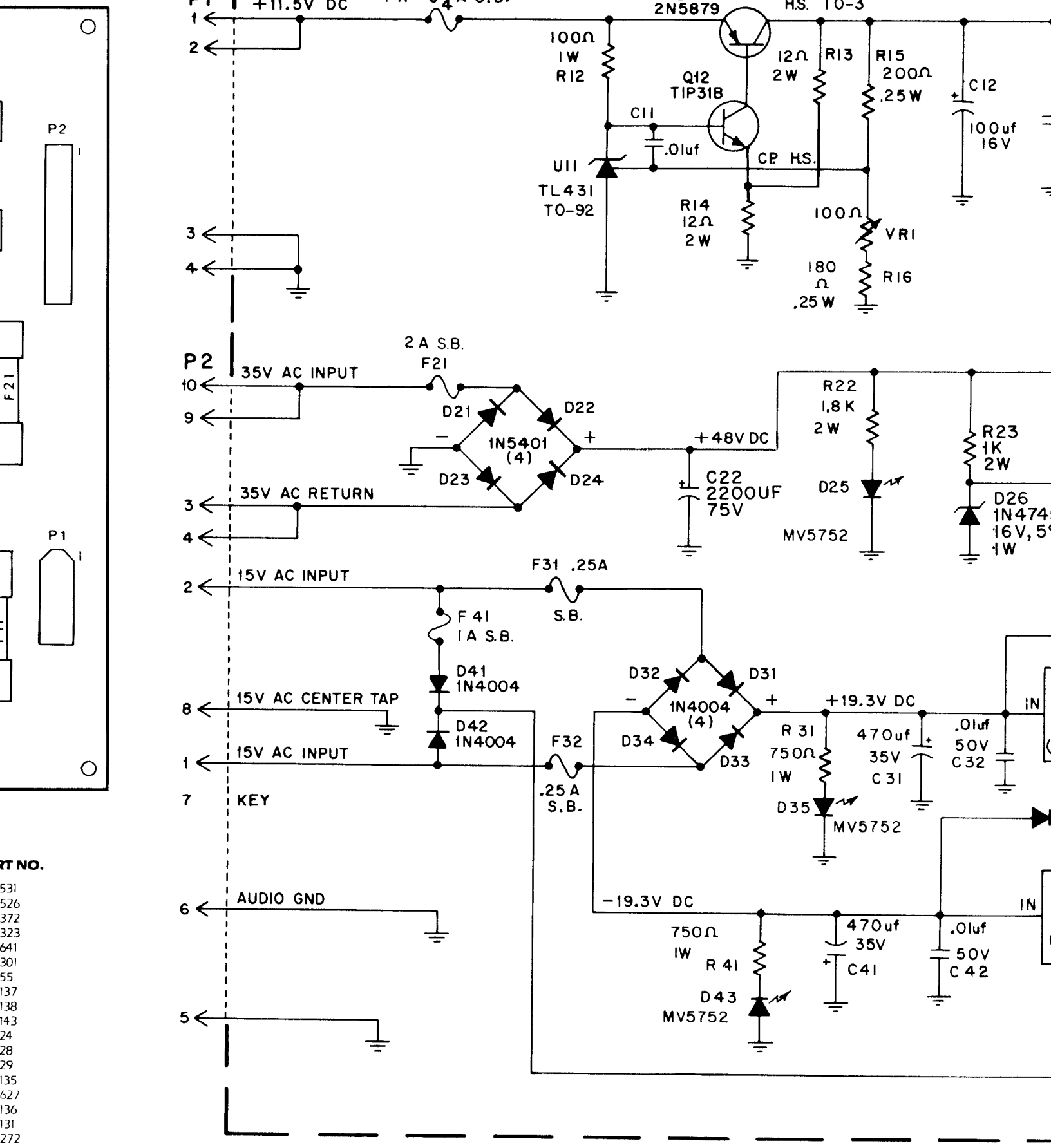

RT NO.

531
526
372
323
641
301
55
137
138
143
24
28
29
135
627
136
131
272
473
130
134

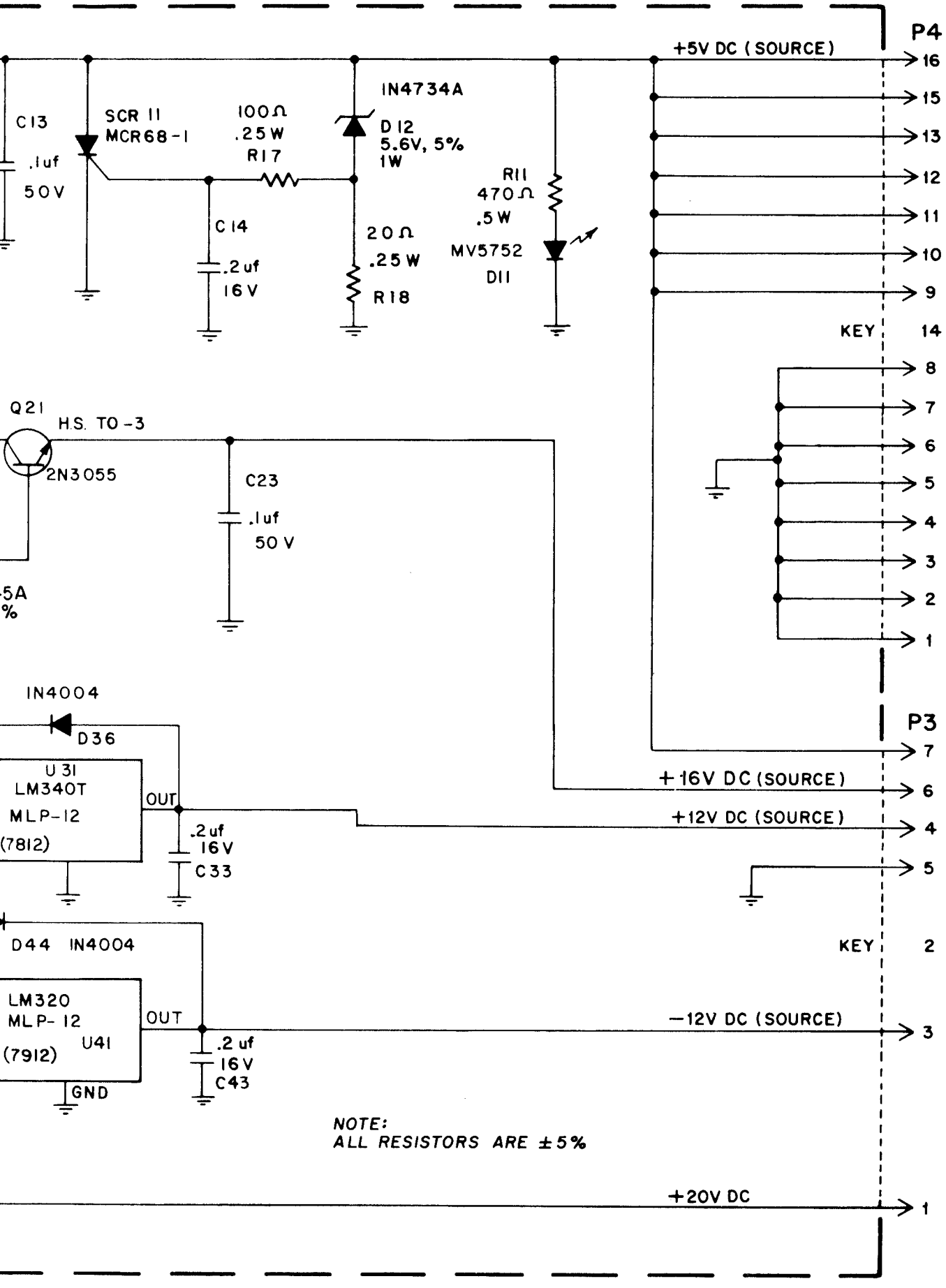

POWER SUPPLY ASSY. (A3), SCHEMATIC DIAGRAM

X. WIRING AND SCHEMATIC DIAGRAMS, PARTS LISTS

SOUND BOARD ASSY. (A6), COMPONENT LOCATION

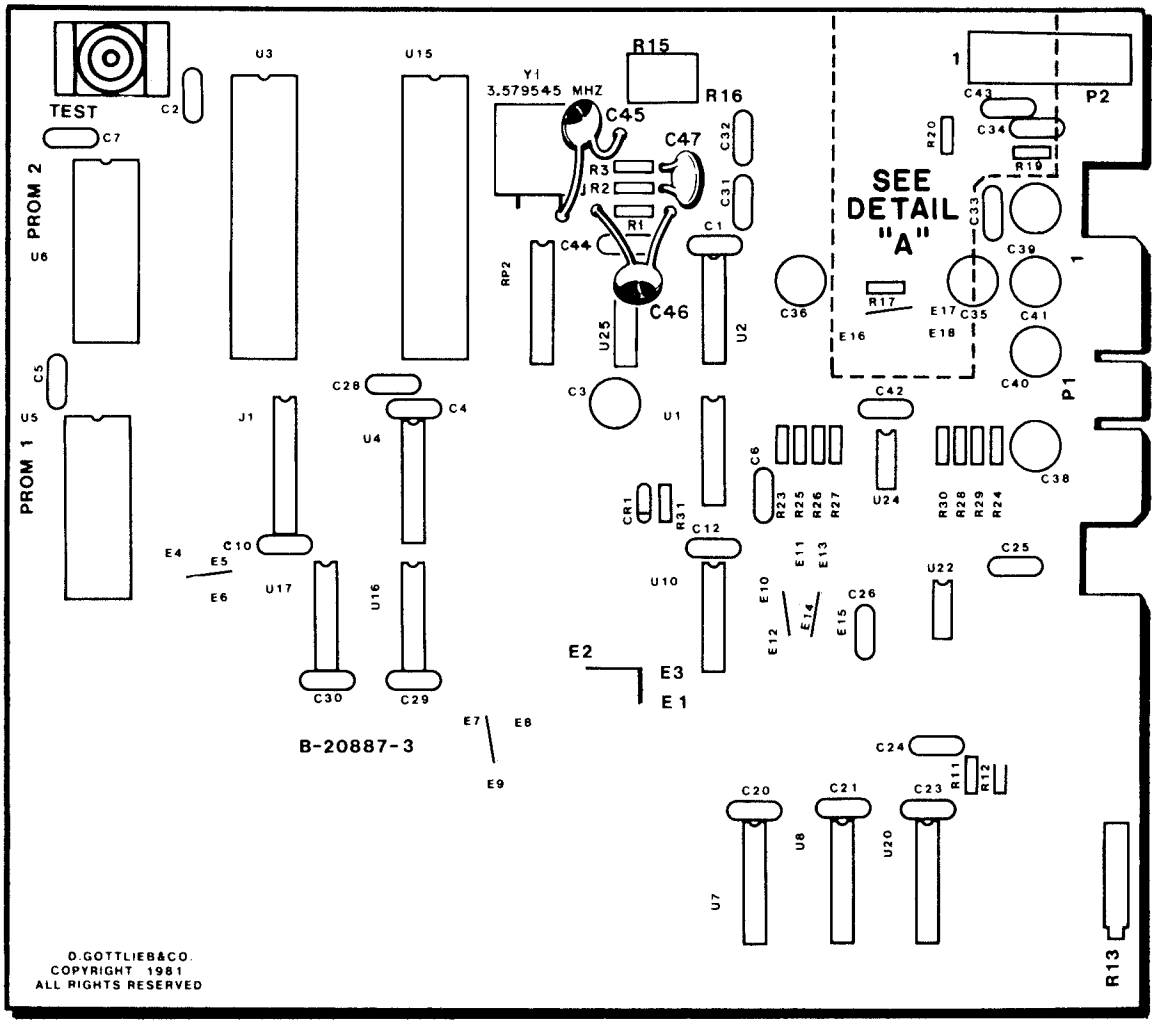

SOUND BOARD ASSY. (A6), PARTS LIST

REFERENCE	DESCRIPTION	PART NO.
	Sound Board Assembly	MA-487
C1, C2	Capacitor, 0.1UF, 25V	XO-248
C4-C7, C10		
C12, C20, C21		
C23, C25, C26		
C28, C29, C30		
C33, C42, C44		
C31, C32	Capacitor, .047UF, 25V	XO-222
C37	Capacitor, 4.7UF, 35V	XO-291
C3, C38-C41	Capacitor, 47UF, 50V	XO-210
C24	Capacitor, 100PF	XO-223
C36	Capacitor, 470UF, 35V	XO-284
C45, C46	Capacitor, 33PF	XO-277
C47	Capacitor, .01UF, 100V	XO-202
CR1	Diode, 1N4148	XO-261
R1, R11, R12	Resistor, 5.6K ohm, 5%, 1/4W	XO-19
R2, R3	Resistor, 2K ohm, 5%, 1/4W	XO-14
R13	Potentiometer, 10K ohm	XO-108
R15	Potentiometer, 10K ohm	XO-109
R23-R30	Resistor, 10K ohm, 5%, 1/4W	XO-18
R31	Resistor, 68K ohm, 5%, 1/4W	XO-189

REFERENCE	DESCRIPTION	PART NO.
RP2	Resistor, DIP	XO-168
SW1	Switch, Momentary Pushbutton	XO-515
U1	IC, 7414	XO-397
U2	IC, SN74LS74N	XO-434
U3	CPU, R6502-13	XO-360
U4	IC, SN74LS138N	XO-437
U5-U6	EPROM, 2732	XO-485
U7	IC, SN74LS75	XO-394
U10	IC, SN74LS02N	XO-428
U15	RRIOT, R6532-18	XO-361
U16	IC, SN74LS04N	XO-418
U17	IC, SN74LS30N	XO-432
U20	Converter, PMI, 1408A-6P	XO-416
U22	IC, LM741CP	XO-393
U24	IC, Dual Comparitor, LM193	XO-396
U25	Inverter, 7404	XO-402
Y1	Crystal, 3.579545MHZ	XO-456
	Socket, 22 Pin DIP	XO-467
	Socket, 24 Pin (2)	XO-529
	Socket, 40 Pin (2)	XO-530

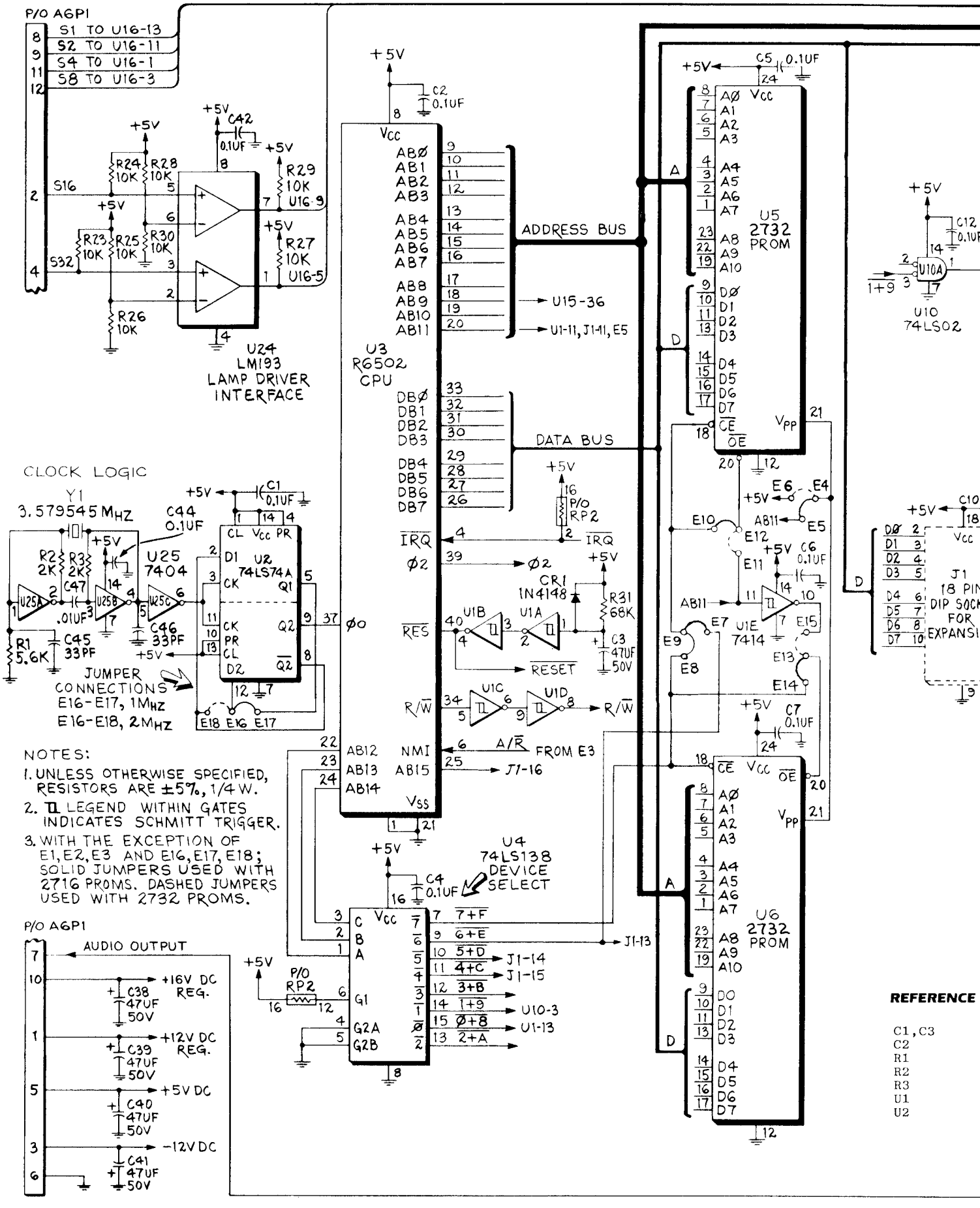

REFERENCE

C1, C3
C2
R1
R2
R3
U1
U2

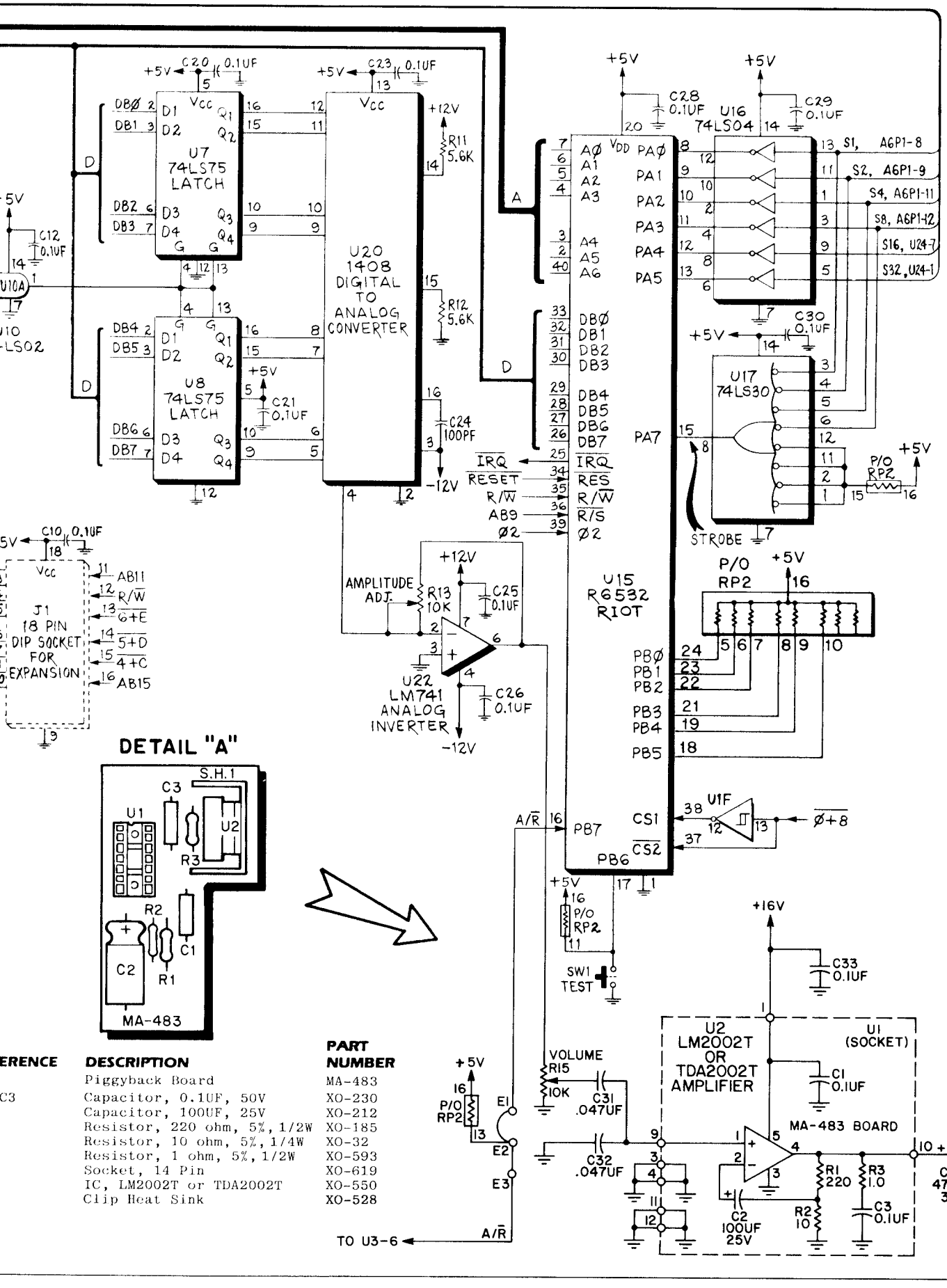

ERENCE	DESCRIPTION	PART NUMBER
	Piggyback Board	MA-483
C3	Capacitor, 0.1UF, 50V	XO-230
	Capacitor, 100UF, 25V	XO-212
	Resistor, 220 ohm, 5%, 1/2W	XO-185
	Resistor, 10 ohm, 5%, 1/4W	XO-32
	Resistor, 1 ohm, 5%, 1/2W	XO-593
	Socket, 14 Pin	XO-619
	IC, LM2002T or TDA2002T	XO-550
	Clip Heat Sink	XO-528

SOUND BOARD ASSY. (A6), SCHEMATIC DIAGRAM

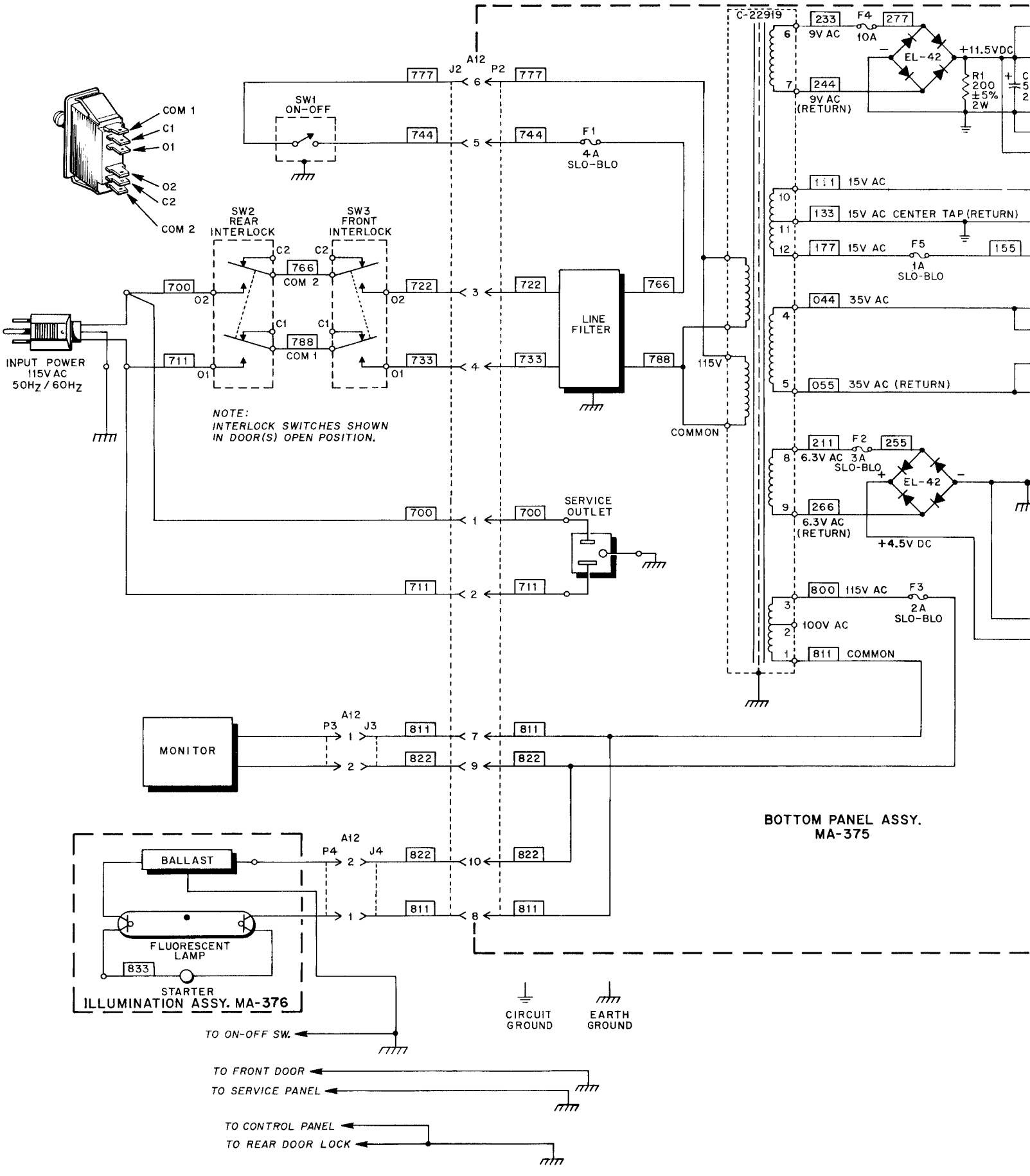

COM 1
C1
O1
O2
C2
COM 2
SW1
ON-OFF
SW2
REAR
INTERLOCK
SW3
FRONT
INTERLOCK
C2
766
COM 2
C1
788
COM 1
O2
O1
INPUT POWER
115V AC
50Hz / 60Hz
NOTE:
INTERLOCK SWITCHES SHOWN
IN DOOR(S) OPEN POSITION.
A12
J2
P2
777
744
722
733
700
711
F1
4A
SLO-BLO
LINE
FILTER
766
788
115V
COMMON
SERVICE
OUTLET
C-22919
233
9V AC
F4
10A
277
EL-42
+11.5VDC
R1
200
±5%
2W
244
9V AC
(RETURN)
111
15V AC
133
15V AC CENTER TAP (RETURN)
177
15V AC
F5
1A
SLO-BLO
155
044
35V AC
055
35V AC (RETURN)
211
6.3V AC
F2
3A
SLO-BLO
255
EL-42
266
6.3V AC
(RETURN)
+4.5V DC
800
115V AC
F3
2A
SLO-BLO
100V AC
811
COMMON
MONITOR
P3
J3
811
822
BOTTOM PANEL ASSY.
MA-375
BALLAST
P4
J4
FLUORESCENT
LAMP
833
STARTER
ILLUMINATION ASSY. MA-376
CIRCUIT
GROUND
EARTH
GROUND
TO ON-OFF SW.
TO FRONT DOOR
TO SERVICE PANEL
TO CONTROL PANEL
TO REAR DOOR LOCK

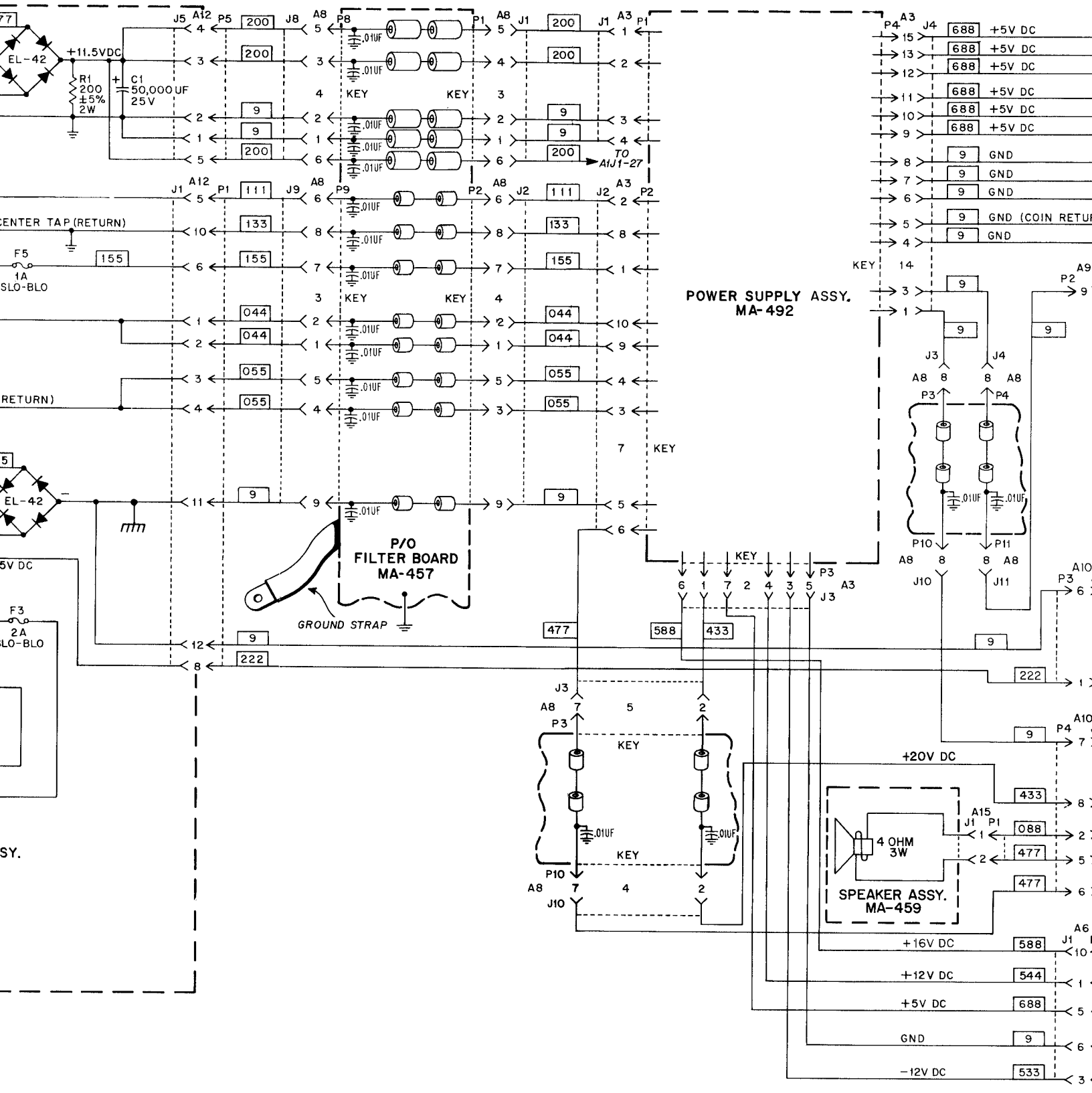
EL-42
+11.5VDC
R1 200 ±5% 2W
C1 50,000 UF 25V
TO A1J1-27
CENTER TAP (RETURN)
F5 1A SLO-BLO
EL-42
F3 2A SLO-BLO
P/O FILTER BOARD MA-457
GROUND STRAP
POWER SUPPLY ASSY. MA-492
+5V DC
GND
GND (COIN RETU
KEY
.01UF
+20V DC
4 OHM 3W
SPEAKER ASSY. MA-459
+16V DC
+12V DC
+5V DC
GND
−12V DC

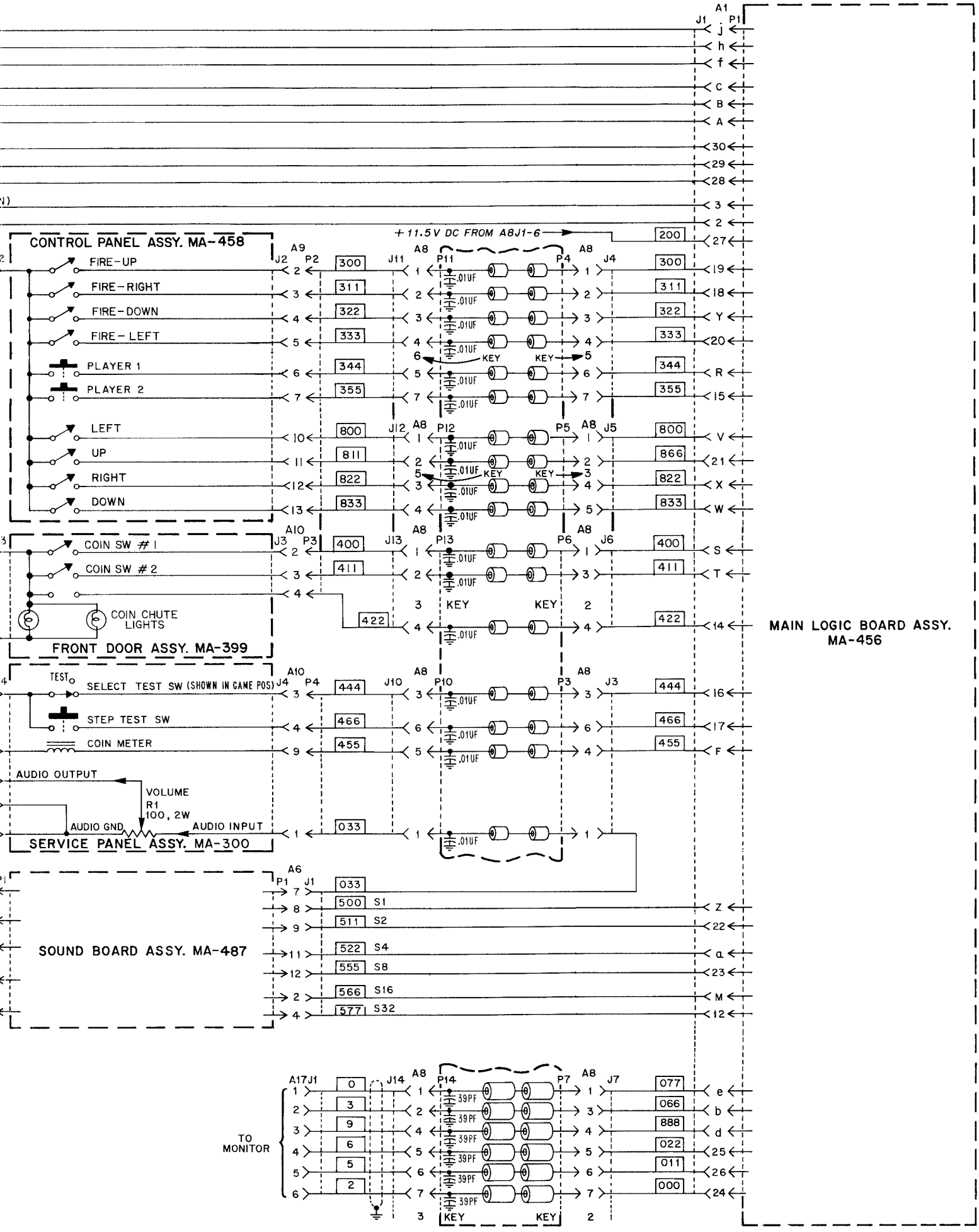

PRIMARY POWER/FILTER BOARD/INTERCONNECTION DIAGRAM

XI. PARTS INFORMATION

TABLE OF CONTENTS

PAGE

SPEAKER/MARQUEE ASSY. 34

ILLUMINATION ASSY. 34

CONTROL PANEL ASSY. 35

SERVICE PANEL ASSY. 36

BOTTOM PANEL ASSY. 37

CABINET PARTS 38

CABINET PARTS 39

XI. PARTS INFORMATION

SPEAKER/MARQUEE ASSY. AND ILLUMINATION ASSY.

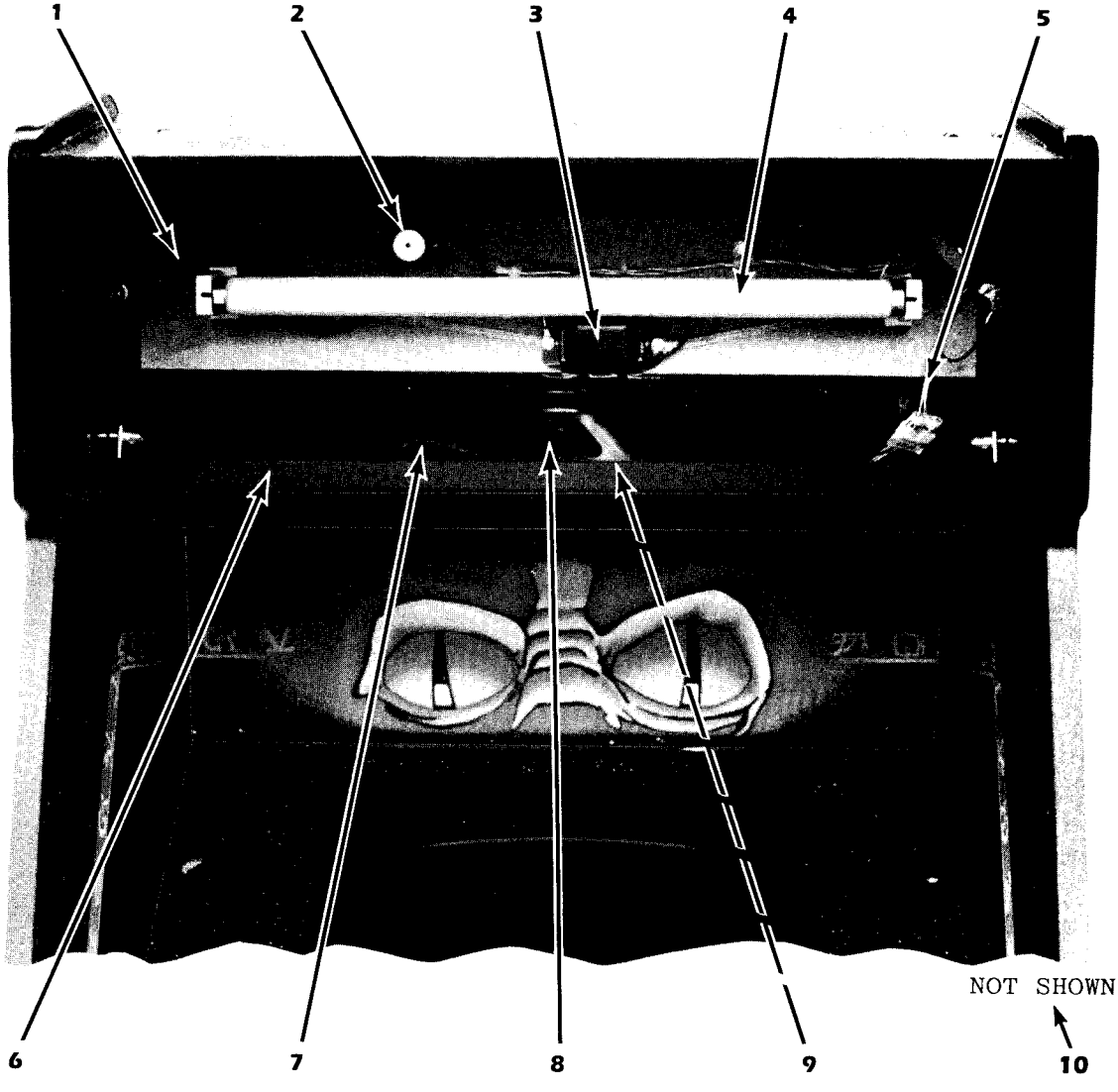

ITEM	DESCRIPTION	PART NO.
1.	Illumination Assy.	MA-376
2.	Starter	EL-69
3.	Ballast (60 HZ)	EL-70
4.	Lamp, Fluorescent	LA-4
5.	Cable Assy.	MA-364
6.	Speaker Assy.	MA-459
7.	Cable Assy.	MA-318
8.	Speaker	EL-93
9.	Speaker Grill	B-20931
10.	Marquee, Lexan (Screen)	A-23044

XI. PARTS INFORMATION

CONTROL PANEL ASSY.

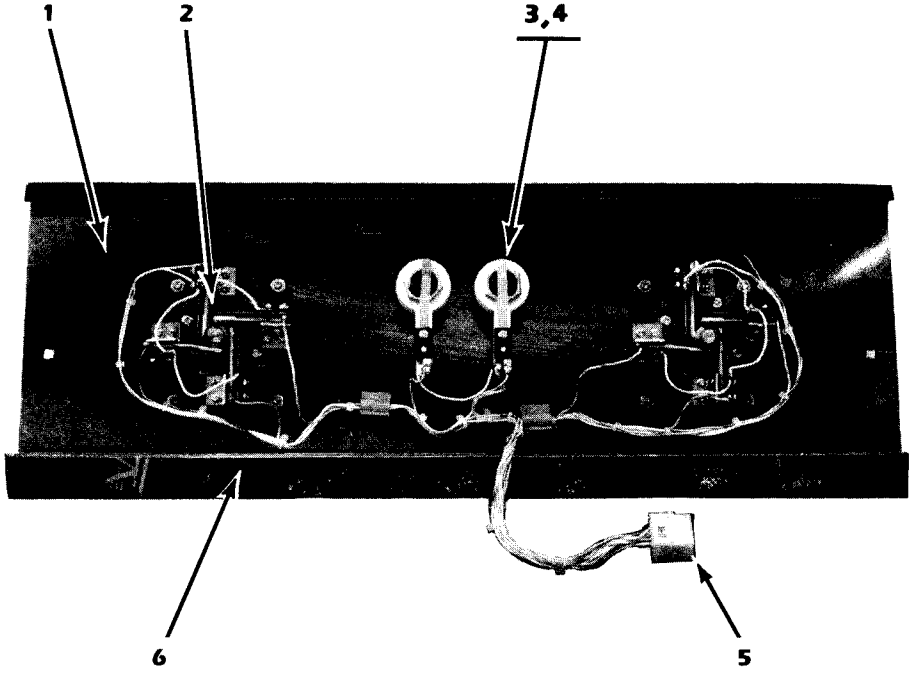

ITEM	DESCRIPTION	PART NO.
1.	Control Panel Assy.	MA-458
2.	Joystick (2)	C-22917
3.	Short Button (2)	A-21970
4.	Button Holder and Switch (2)	A-21971
5.	Cable Assy.	MA-464
6.	Lexan Overlay	A-23045

XI. PARTS INFORMATION

SERVICE PANEL ASSY.

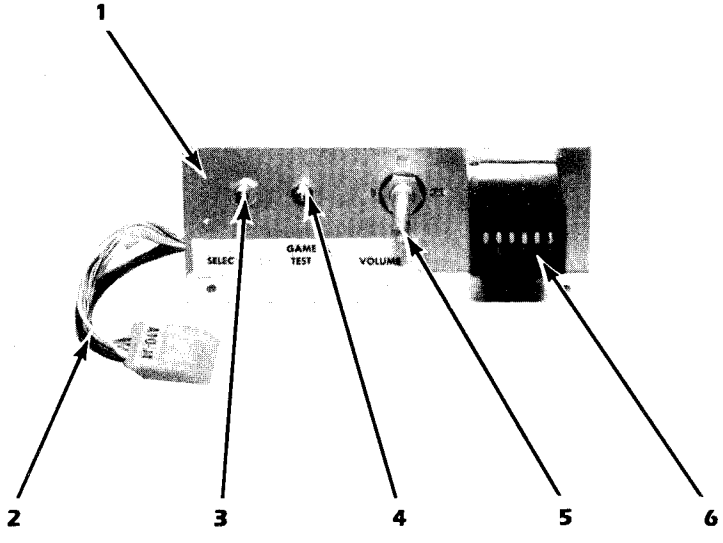

ITEM	DESCRIPTION	PART NO.
1.	Service Panel Assy.	MA-300
2.	Cable Assy.	MA-316
3.	Switch (Push Button)	EL-57
4.	Switch (Toggle)	EL-85
5.	Volume Control	XO-104
6.	Coin Meter	EL-84

XI. PARTS INFORMATION

BOTTOM PANEL ASSY.

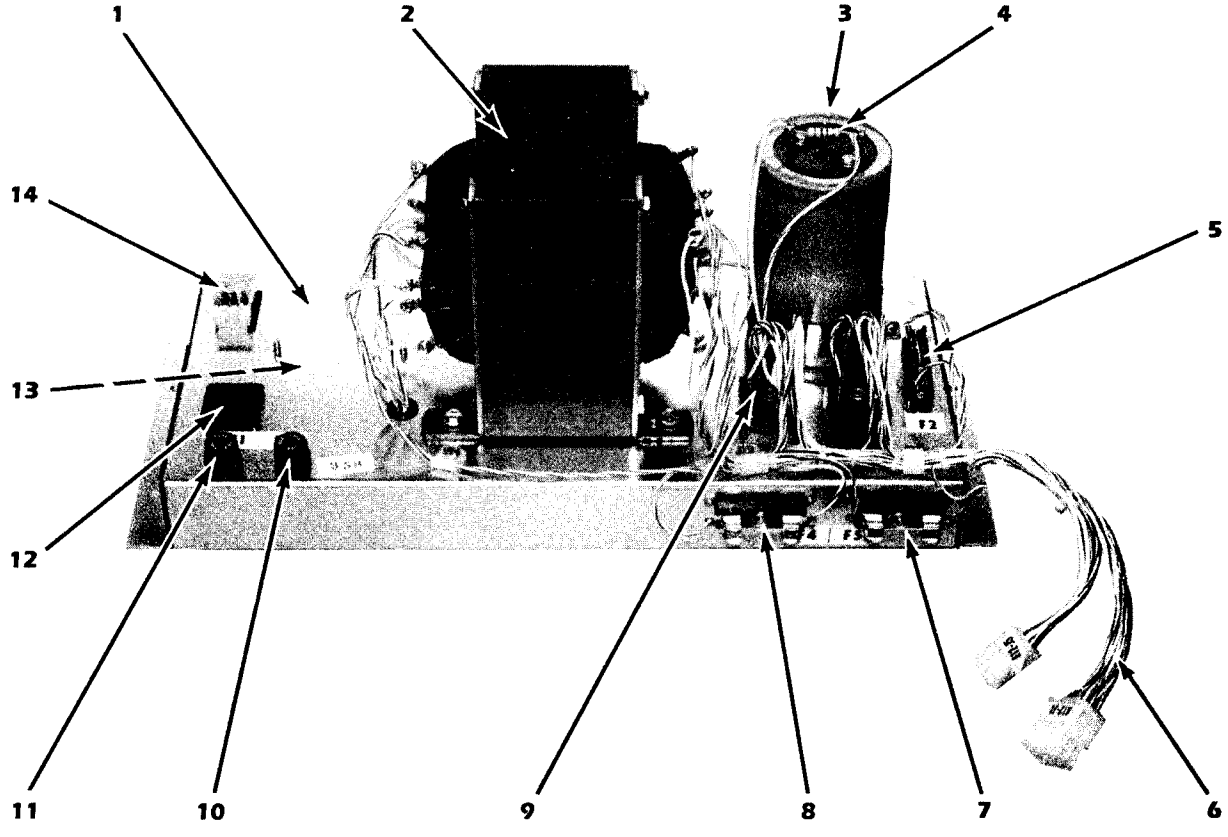

ITEM	DESCRIPTION	PART NO.
1.	Bottom Panel Assy.	MA-375
2.	Transformer	C-22919
3.	Capacitor, 50, 000UF, 25V	XO-141
4.	Resistor, 200 OHM, 5%, 2W	XO-142
5.	Fuse, 3 AMP, SLO-BLO	EL-9
6.	Cable Assy. (Secondary)	MA-476
7.	Fuse, 1 AMP, SLO-BLO	EL-6
8.	Fuse, 10 AMP	EL-23
9.	Bridge Rectifier (2)	EL-42
10.	Fuse, 2 AMP, SLO-BLO	EL-7
11.	Fuse, 4 AMP, SLO-BLO	EL-33
12.	Service Outlet	A-18133
13.	Line Filter	EL-50
14.	Cable Assy. (Primary)	MA-363

XI. PARTS INFORMATION

CABINET PARTS

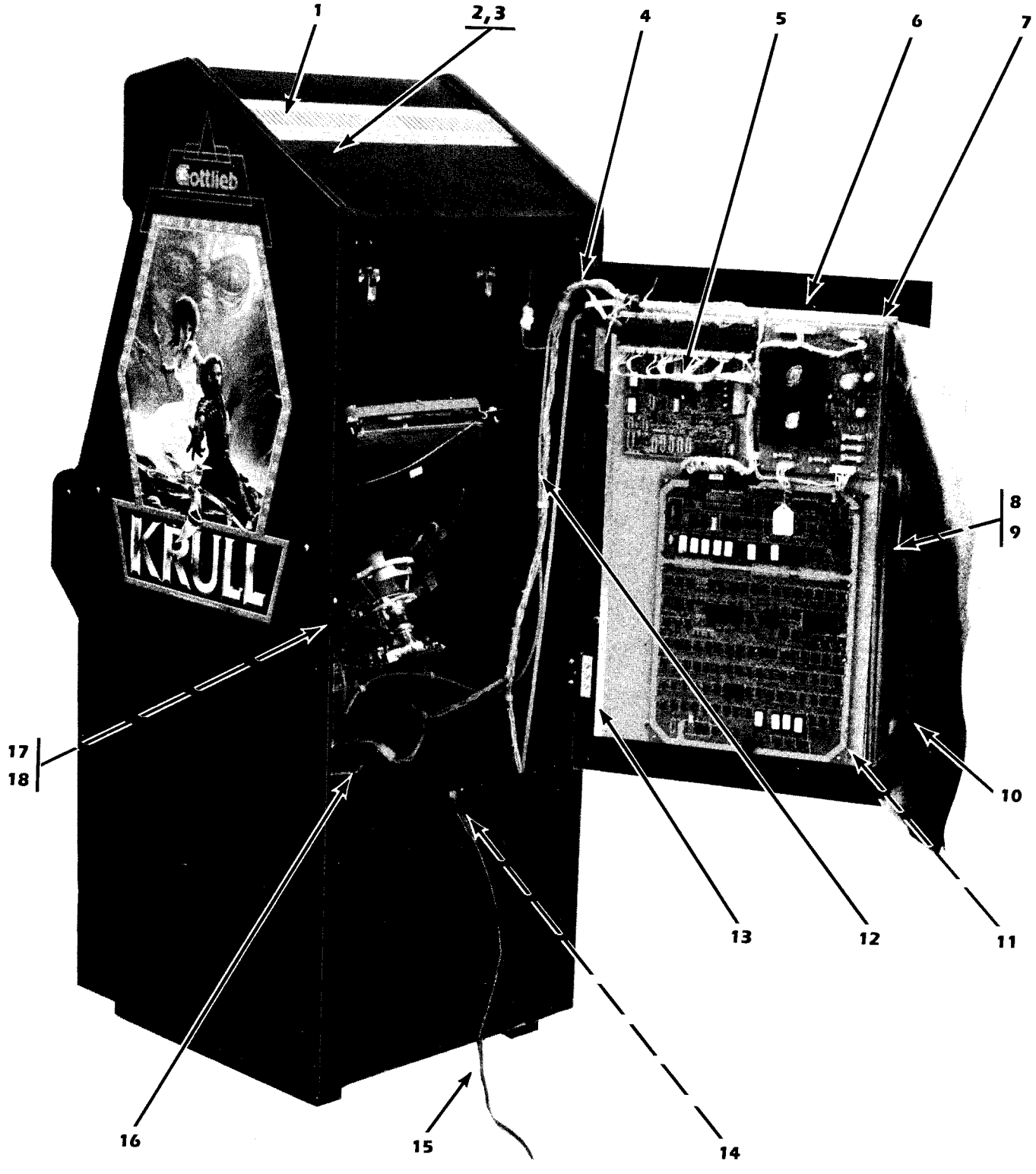

ITEM	DESCRIPTION	PART NO.	ITEM	DESCRIPTION	PART NO.
1.	Vent Channel (2)	D-21754	10.	Shield, Top	D-22632
2.	On-Off Switch	EL-56	11.	Shield, Bottom	C-22633
3.	Switch Plate	A-22396	12.	Monitor Cable	A-22620
4.	Cable Assy. Master Electronics	MA-466	13.	Clip Bracket, Shield	B-22631
5.	Interconnect Cable	MA-465	14.	Cover Plate, Line Cord	A-21955
6.	Back Door	D-23073-3	15.	Line Cord	B-15357
7.	Master Electronic Board	MA-1155	16.	Cable Assy. High Voltage	MA-360
8.	Rear Door Lock	MH-0	17.	Interlock Switch	EL-66
9.	Anchor Plate, Lock	MH-1	18.	Cover, Interlock Switch	A-21888

XI. PARTS INFORMATION

CABINET PARTS

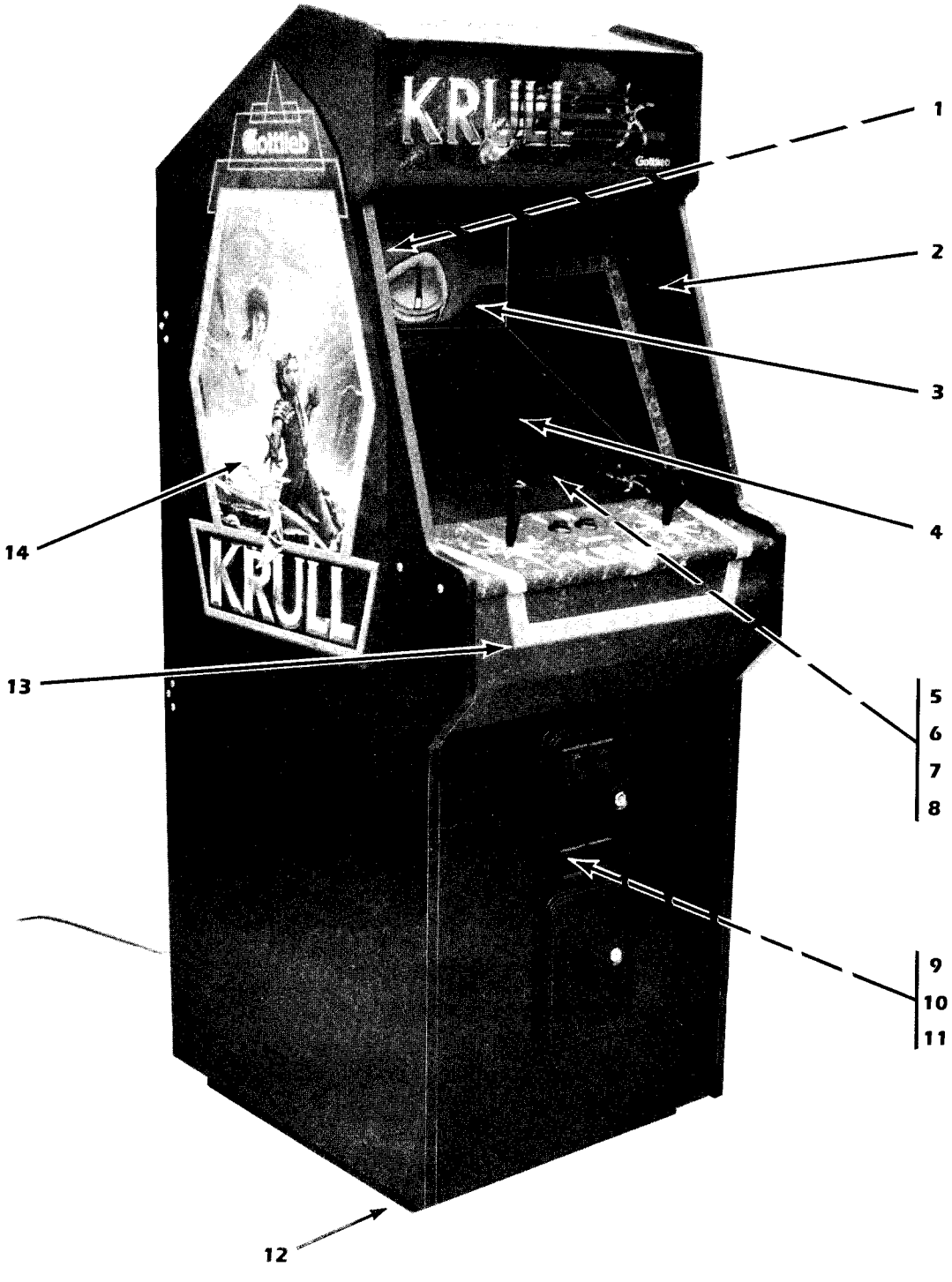

ITEM	DESCRIPTION	PART NO.	ITEM	DESCRIPTION	PART NO.
1.	Left Side CRT Decal	A-23068	8.	Monitor	C-22462-3
2.	Right Side CRT Decal	A-23069	9.	Cable Assy. Front Door	MA-369
3.	Rear Side CRT Decal	A-23070	10.	Interlock Switch	EL-66
4.	Top Glass	A-22464	11.	Cover, Interlock Switch	A-21888
5.	CRT Frame	A-23042	12.	3" Leg Adjuster (2)	MH-21
6.	Monitor Filter Glass	C-22849-1	13.	Lexan Overlay (Screen)	A-23043
7.	Monitor Mask	D-22463	14.	Side Decal (Left or Right)	D-21346

SERVICE NOTES

LIMITED WARRANTY

D. Gottlieb & Co. warrants to the initial purchaser of the D. Gottlieb & Co. machine that the items listed in the following schedule as installed and used in the original D. Gottlieb & Co. machine will for the applicable period set forth in the schedule, computed from the initial date of purchase from an authorized D. Gottlieb & Co. distributor, be free of defects in materials and workmanship:

SCHEDULE

GAME	ITEM	WARRANTY PERIOD
Pinball	All Electronic Printed circuit boards	90 days
Pinball-Video	All Electronic Printed Circuit Boards	90 days
	Card Cage	90 days
	Television Monitor	30 days
Video	All Electronic Printed Circuit Boards	90 days
	Television Monitor	30 days

This Limited Warranty does not apply to any parts damaged in the course of handling or assembling by the customer or damage due to other than normal use or use in violation of instructions or reasonable practices, or further damaged in return shipment. This Limited Warranty is made only to the original customer, and is and shall be in lieu of all other warranties expressed or implied, and of all other obligations or liabilities on the part of D. Gottlieb & Co. and in no event shall D. Gottlieb & Co. be liable for any anticipated profits, consequential damages, loss of time, or other losses incurred by the customer in connection with the purchase or operation of D. Gottlieb & Co. machines or components thereof.

The registration card with each D. Gottlieb & Co. factory-wired machine must be filled in and returned to D. Gottlieb & Co. within ten days after date of purchase for this Limited Warranty to be effective. This Limited Warranty applies only to machines so registered.

THIS LIMITED WARRANTY IS IN LIEU OF ANY OTHER EXPRESS OR IMPLIED WARRANTIES, INCLUDING ANY IMPLIED WARRANTY OF MERCHANTABILITY OR FITNESS, AND OF ANY OTHER OBLIGATION ON THE PART OF THE SELLER AND D. GOTTLIEB & CO.

Gottlieb™
AMUSEMENT GAMES

Gottlieb™
AMUSEMENT GAMES
165 W. Lake Street Northlake, IL 60164
(312) 562•7400 Telex 72•8463
A Columbia Pictures Industries Company

©1983 D. Gottlieb & Co.
All Rights Reserved
Printed in U.S.A.