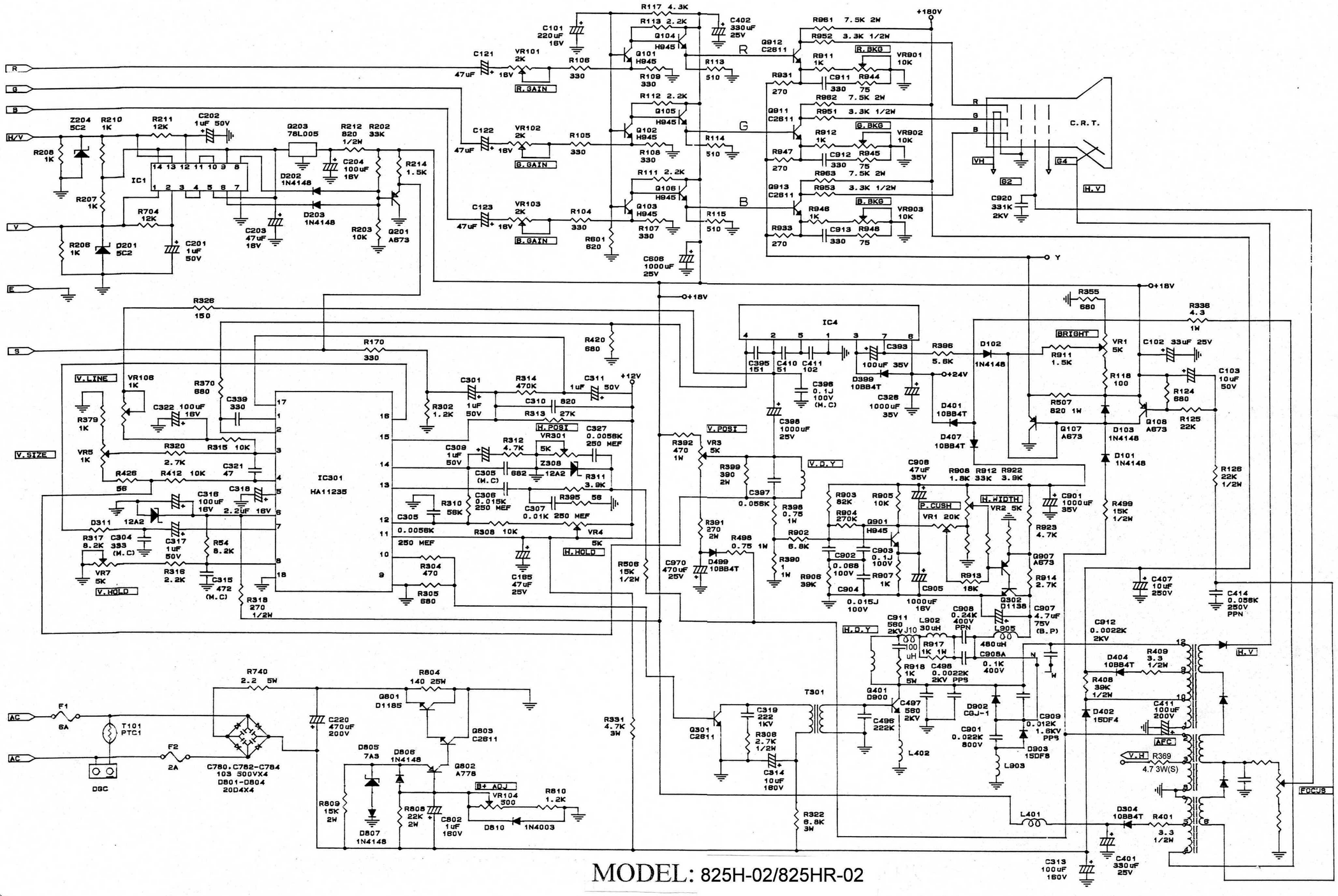

MODEL: 825H-02/825HR-02

REVISION	DATE	DESCRIPTION	REVISION	DATE	DESCRIPTION	DRAWD BY	DESIGEND BY	SCALE
						林淑萍		
						CHECKED BY	APPROVAL BY	DATE
						唐銘德	林峻安	86. 11. 14

維亞 WEI-YA 懷藝電子股份有限公司 HUAI I ELECTRONICS CO., LTD.

DRAWING NO.	SHEET NO.	JOB NO.
	01-18	

DCC4E010