JS 220

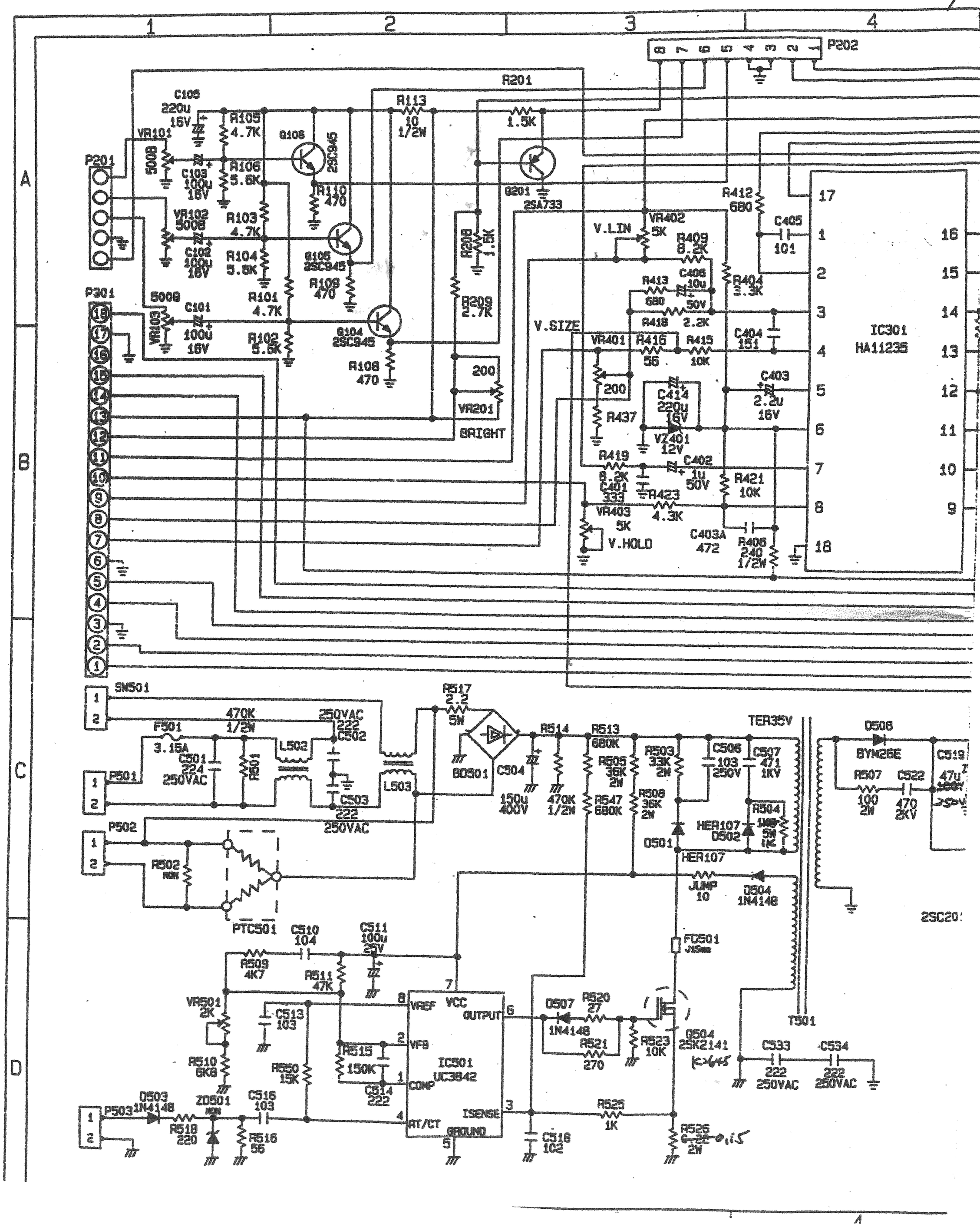
P202
P201
P301
P501
P502
P503
SW501
IC301
HA11235
IC501
UC3942
Q201
2SA733
Q104
2SC945
Q105
2SC945
Q106
2SC945
Q504
2SK2141
T501
TER35V
BYM26E
HER107
JUMP
10
1N4148
PTC501
F501
3.15A
VR101
500B
VR102
500B
VR103
500B
VR201
BRIGHT
VR401
VR402
5K
V.LIN
VR403
5K
V.HOLD
V.SIZE
VR501
2K
VZ401
12V
BD501
FD501
J15mm
R201
R113
10
1/2W
R412
680
R409
8.2K
R404
3.3K
R413
680
R418
2.2K
R416
56
R415
10K
R437
R419
8.2K
R423
4.3K
R421
10K
R406
240
1/2W
R517
2.2
5W
R514
470K
1/2W
R513
680K
R505
36K
2W
R547
680K
R503
33K
2W
R508
36K
2W
R504
5W
1K
R507
100
2W
R522
470
2KV
R520
27
R521
270
R523
10K
R525
1K
R526
2W
R509
4K7
R511
47K
R510
6K8
R550
15K
R515
150K
R514
222
R516
56
R518
220
R502
NON
ZD501
NON
D501
D502
D504
1N4148
D506
D507
1N4148
D508
D503
1N4148
C105
220u
16V
C103
100u
16V
C102
100u
16V
C101
100u
16V
C405
101
C406
10u
50V
C404
151
C403
2.2u
16V
C414
220u
16V
C402
1u
50V
C401
333
C403A
472
C501
224
250VAC
C502
222
250VAC
C503
222
250VAC
C506
103
250V
C507
471
1KV
C519
47u
C533
222
250VAC
C534
222
250VAC
C510
104
C511
100u
25V
C513
103
C516
103
C518
102
C524
0.15
L502
L503
2SC20
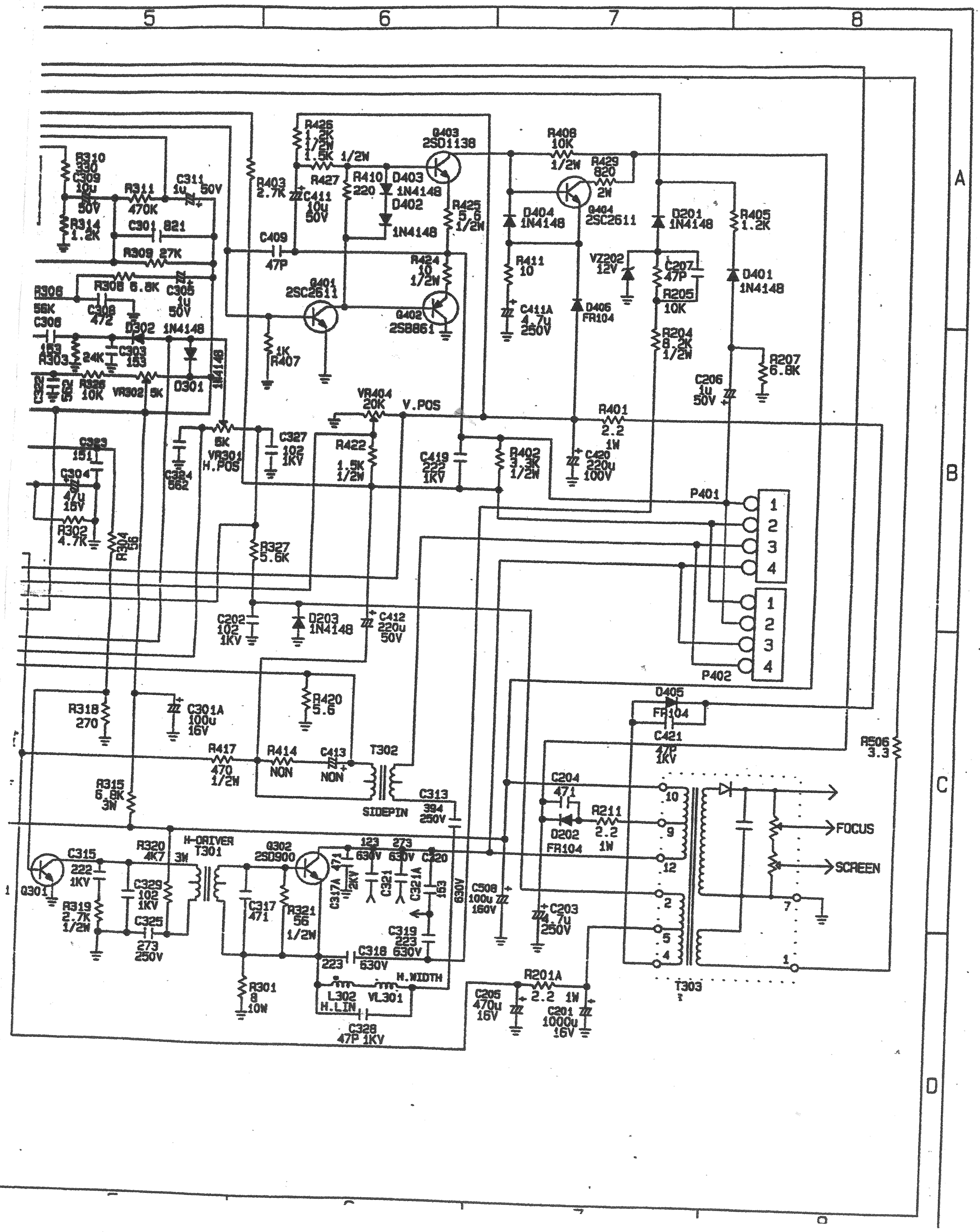
JS 220 LC / JS 220 LLC