# MODEL 20 – Z2 AW

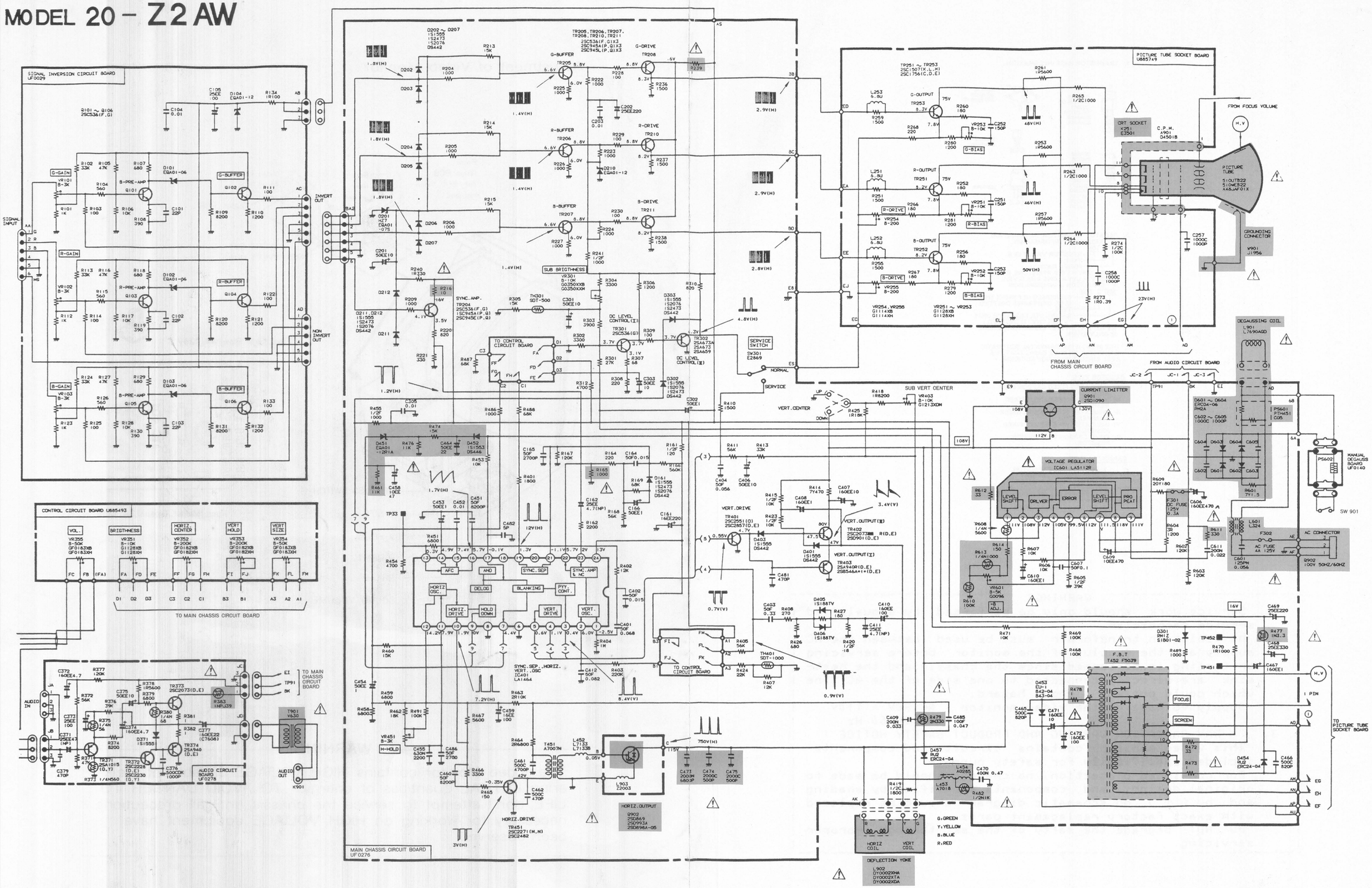


[35 Type] 20–Z2AW SCHEMATIC

©1985 Nintendo of America Inc.

1. TRANSISTOR BASE INFORMATION.

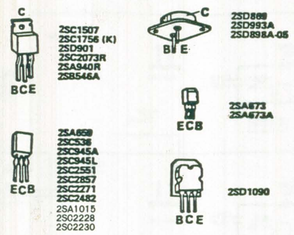


2. RESISTOR, CAPACITOR; INFORMATION.
   - RESISTOR – INFORMATION.

   1 F 10K
   - 10K — RESISTOR VALUE IN Ω.
   - F — TYPE.
   - 1 — POWER RATING.

   AS TO 1/4W F-TYPE RESISTORS, RESISTANCE VALUES ALONE ARE GIVEN.
   - CAPACITOR – INFORMATION

   500 C 100P
   - 100P — EXPRESSED IN P WHEN THE UNIT IS PF. OTHERWISE OMITTED.
   - C — TYPE
   - 500 — RATING VOLTAGE (THE UNIT "V" OR "WV" IS OMITTED.)

   AS TO "50V, C-TYPE" CAPACITORS VALUE IS ONLY GIVEN.

3. THIS BEING A FUNDAMENTAL SCHEMATIC THERE WILL BE SOME CASES THAT THE REAL CIRCUIT DOES NOT COINCIDE WITH THIS.

RESISTOR TYPE

F; INSULATED FIXED CARBON FILM RESISTOR.
N; INSULATED METAL FILM FIXED RESISTOR.
R; INSULATED FIXED METAL OXIDE FILM RESISTOR.
Y; INSULATED WIRE WOUND FIXED RESISTOR.
C; FIXED CARBON COMPOSITION RESISTOR.

CAPACITOR TYPE

C : FIXED CERAMIC CAPACITOR.
EE : RADIAL TYPE ALUMINUM ELECTROLYTIC CAPACITOR.
F : POLYESTER FILM CAPACITOR.
N : POLYPROPYLENE FILM CAPACITOR.
(NP): NON-POLAR ALUMINUM ELECTROLYTIC CAPACITOR.

WARNINGS

1. Service work should only be performed by a qualified service technician.
2. An isolation transformer must be used between the AC supply and the AC plug of the monitor before servicing or testing is performed since the chassis and the heat-sink are directly connected to one side of the AC line which could present a shock hazard.
   Supply voltage of the video monitor : AC 90V - 110V 50/60 Hz
3. X-RAY RADIATION WARNING AND PRODUCT SAFETY NOTICE !
   This video monitor contains circuits and components included specifically for safety purpose.
   For continued protection, no changes should be made to original design, and components identified by shading and by ( ⚠ ) on schematic diagram should be replaced with exact factory replacement parts.
   DO NOT degrade the safty of the set through improper servicing.

## Adjustment of Video Monitor

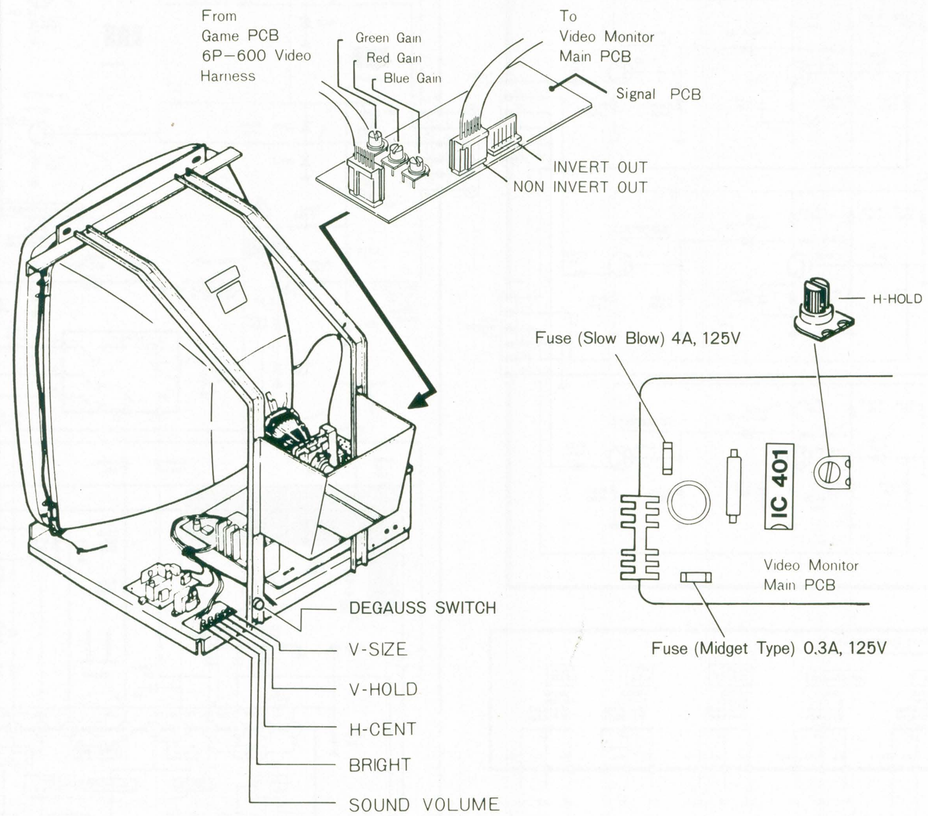


**WARNING**

The Video Monitor contains HIGH VOLTAGE capable of delivering LETHAL quantities of energy. TO AVOID DANGER TO LIFE, don't attempt to service the chassis until all precautions necessary for working on HIGH VOLTAGE equipment have been observed.