X-Y Video Power Supply Wiring Diagram (034633-01 B)

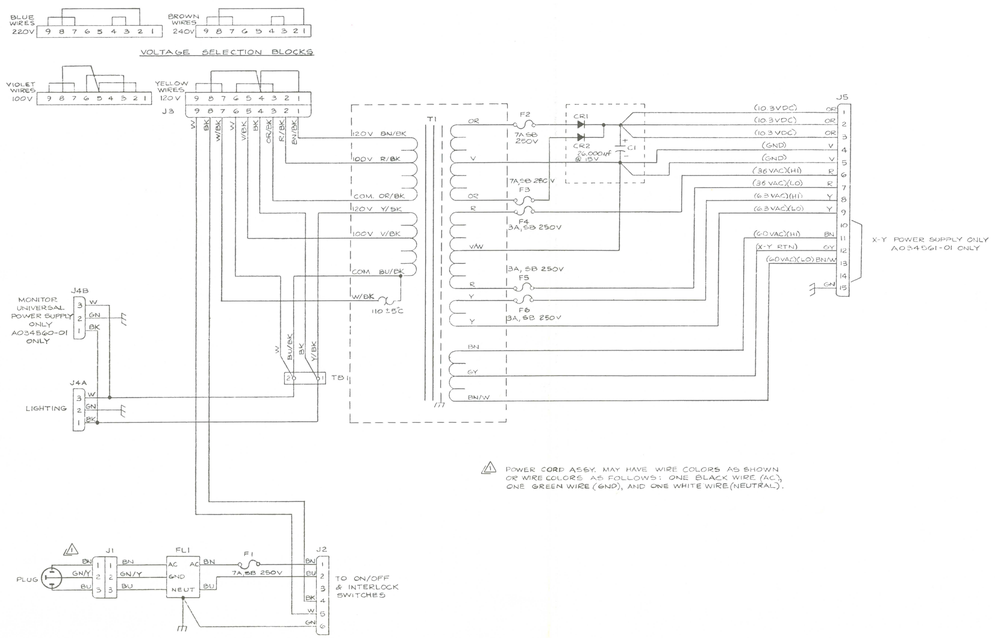

Regulator Audio II PCB Schematic (035435-02 C)

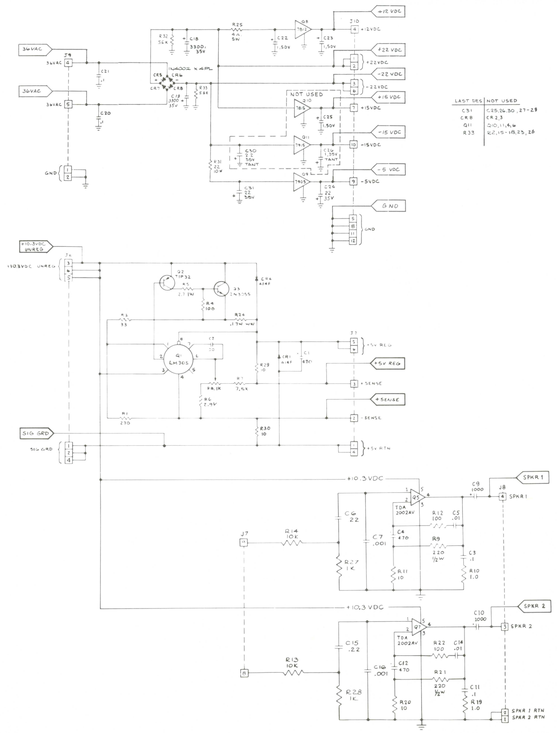

Regulator/Audio II PCB

The Regulator/Audio II PCB has the dual functions of regulating the +5 VDC logic power to the game PCB and amplifying the audio from the game PCB.

Regulator Circuit

The regulator consists of voltage regulator Q1, current source power transistor Q3 and Q3's bias transistor Q2. The regulator accurately regulates the logic power input to the game PCB by monitoring the voltage through high-impedance inputs +SENSE and −SENSE. The inputs are directly from the +5 VDC and ground inputs to the game PCB. Therefore, the regulator regulates the voltage on the game PCB. This eliminates a reduced voltage due to IR buildup on the wire harness between the regulator and the game PCB. Variable resistor R8 is adjusted for the +5 VDC on the game PCB. Once adjusted, the voltage at the input of the game PCB will remain constant at this voltage.

Regulator Adjustment

1. Connect a voltmeter between +5 V and GND test points of the game PCB.
2. Adjust variable resistor R8 on the Regulator/Audio II PCB for +5 VDC reading on the voltmeter.
3. Connect a voltmeter between +5 V REG and GND on the Regulator/Audio II PCB. Voltage reading must not be greater than +5.5 VDC. If greater, try cleaning edge connectors on both the game PCB and the Regulator/Audio II PCB.
4. If cleaning PCB edge connectors doesn't decrease voltage difference, connect minus lead of voltmeter to GND test point of Regulator/Audio II PCB and plus lead to GND test point of game PCB. Note the voltage.
   Now connect minus lead of voltmeter to +5 REG test point on Regulator/Audio II PCB and plus lead to +5 V test point on game PCB. From this you can see which harness circuit is dropping the voltage. Troubleshoot the appropriate harness wire or harness connector.

Audio Circuit

The audio circuit contains two independent audio amplifiers. Each amplifier consists of a TDA2002AV amplifier with a gain of ten.

NOTICE TO ALL PERSONS RECEIVING THIS DRAWING
CONFIDENTIAL: Reproduction forbidden without the specific written permission of Atari, Inc., Sunnyvale, CA. This drawing is only conditionally issued, and neither receipt nor possession thereof confers or transfers any right in, or license to use, the subject matter of the drawing or any design or technical information shown thereon, nor any right to reproduce this drawing or any part thereof. Neither possession nor receipt of this drawing and for manufacture under the corporation's written license, no right to reproduce this drawing is granted or the subject matter thereof unless by written agreement with or written permission from the corporation.

ATARI®

Drawing Package Supplement to WARLORDS™

Operation, Maintenance and Service Manual

Contents of this Drawing Package

Game Coin Door and Power Supply Wiring Diagram	Sheet 1, Side A
Microprocessor, Sync Generator and Power Inputs	Sheet 1, Side B
Playfield Address Selector, Playfield Memory and Playfield Code Multiplexer	Sheet 2, Side A
Switch Inputs, Coin Inputs, Video Outputs, Audio Outputs and Signature Analysis Procedure	Sheet 2, Side B

A Warner Communications Company

Sheet 1, Side A
DP-175-01 1st printing

Warlords™ Upright Wiring Diagram (037231-01 A)

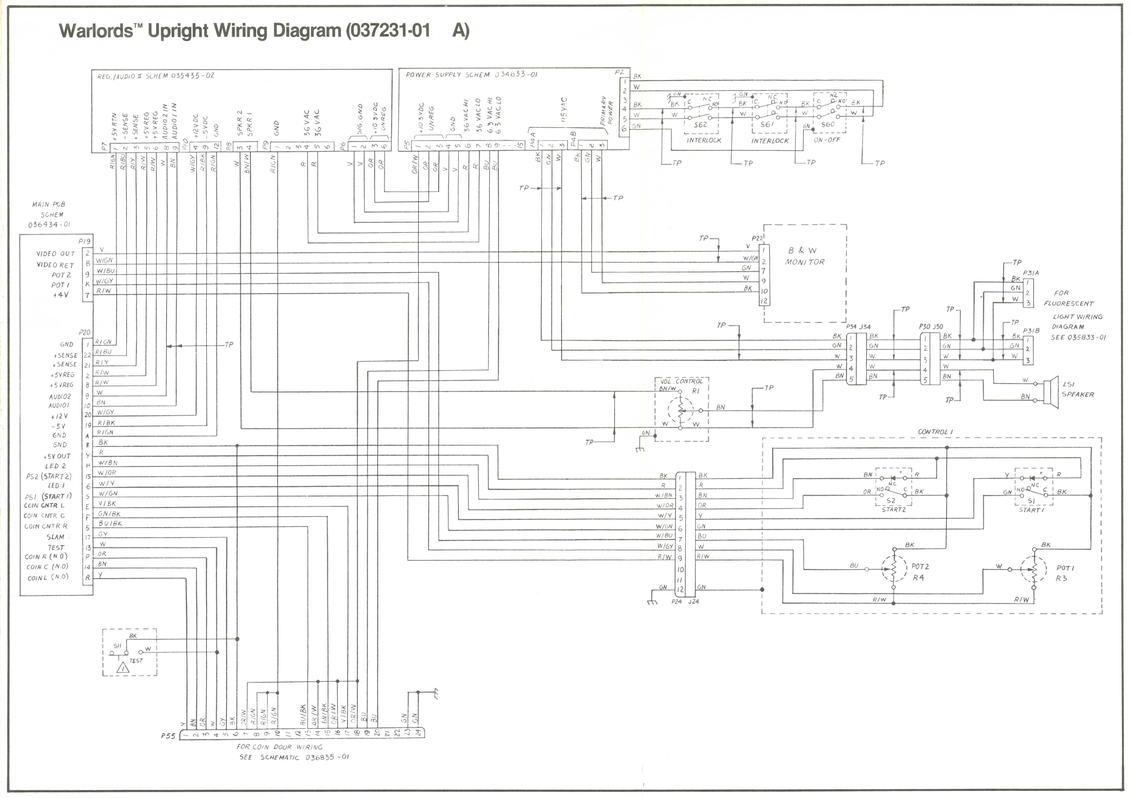
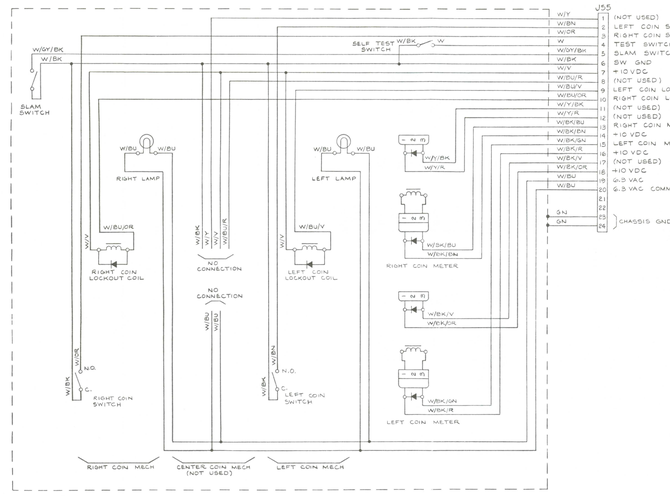
Double Mech Coin Door Wiring Diagram (036835-01 A)