CLOCK CIRCUIT

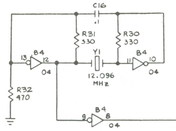

The clock circuit consists of crystal Y1 and associated inverters and counters C3 and B3. Counters C3 and B3 count the crystal frequency down to the frequencies necessary for the Asteroids Deluxe™ game.

MPU CIRCUITRY

NOTE:
The MPU in this game operates at a frequency of 1.5 MHz. Therefore the MPU chip must be the 6502A. The 6502's maximum frequency is 1 MHz and is not compatible with this game.

NOTE:
DO NOT USE split pads on PCB for trouble-shooting purposes.

TO VECTOR GENERATOR MEMORY ADDRESS SELECTOR SHEET 2, SIDE A

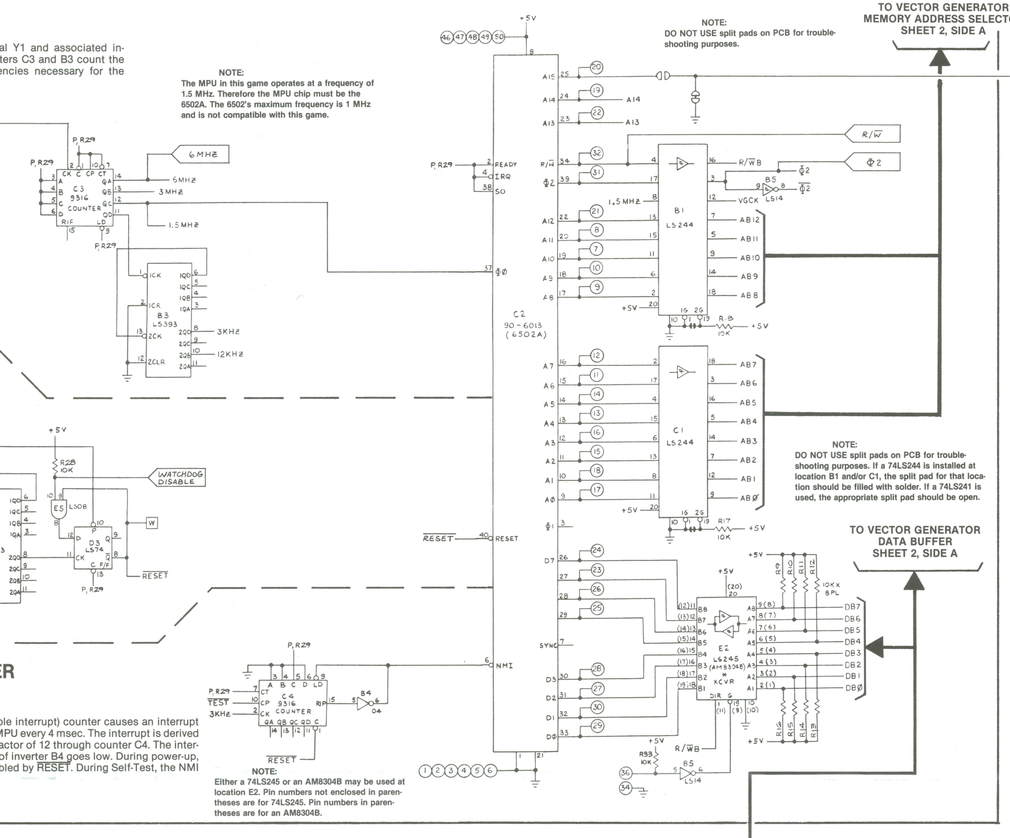

NOTE:
DO NOT USE split pads on PCB for trouble-shooting purposes. If a 74LS244 is installed at location B1 and/or C1, the split pad for that location should be filled with solder. If a 74LS241 is used, the appropriate split pad should be open.

TO VECTOR GENERATOR DATA BUFFER SHEET 2, SIDE A

NOTE:
Either a 74LS245 or an AM8304B may be used at location E2. Pin numbers not enclosed in parentheses are for 74LS245. Pin numbers in parentheses are for an AM8304B.

ADDRESS DECODING CIRCUITRY

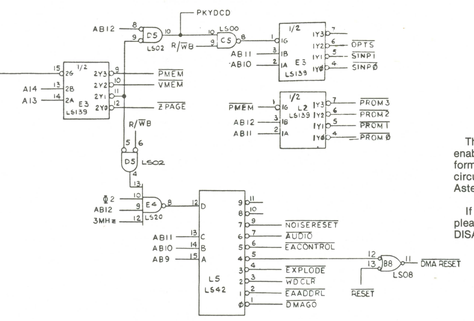

The address decoder performs the function of turning on or enabling the appropriate circuitry at the critical time, so that information can be transferred back and forth between the game circuitry and the MPU. The memory map below is for the Asteroids Deluxe™ game.

If you are going to use the Automatic RAM/ROM Tester, please remember to remove MPU C3 and ground the WDOG DISABLE test point.

MEMORY MAP

	HEXADECIMAL	A15	A14	A13	A12	A11	A10	A9	A8	A7	A6	A5	A4	A3	A2	A1	A0	R/W	D7	D6	D5	D4	D3	D2	D1	D0	FUNCTION
		ADDRESS																	DATA								
	0-3FF	0	0	0	0	0																					Scratch RAM
INPUTS	2000	0	1	0	0	0									0	0	0	R									Not used
	2001	0	1	0	0	0									0	0	1	R	D								3 KHz
	2002	0	1	0	0	0									0	1	0	R	D								VG halted
	2003	0	1	0	0	0									0	1	1	R	D								Shield switch
	2004	0	1	0	0	0									1	0	0	R	D								Fire switch
	2006	0	1	0	0	0									1	1	0	R	D								Slam switch
	2007	0	1	0	0	0									1	1	1	R	D								Self-test switch
	2400	0	1	0	0	1									0	0	0	R	D								Left coin switch
	2401	0	1	0	0	1									0	0	1	R	D								Center coin switch
	2402	0	1	0	0	1									0	1	0	R	D								Right coin switch
	2403	0	1	0	0	1									0	1	1	R	D								1-player start switch
	2404	0	1	0	0	1									1	0	0	R	D								2-player start switch
	2405	0	1	0	0	1									1	0	1	R	D								Thrust switch
	2406	0	1	0	0	1									1	1	0	R	D								Rotate right switch
	2407	0	1	0	0	1									1	1	1	R	D								Rotate left switch
	2800	0	1	0	1	0									0	0	0	R							D	D	Option switch 8, 7 (at R5)
	2801	0	1	0	1	0									0	0	1	R							D	D	Option switch 6, 5
	2802	0	1	0	1	0									0	1	0	R							D	D	Option switch 4, 3
	2803	0	1	0	1	0									0	1	1	R							D	D	Option switch 2, 1
OUTPUTS	2000	0	1	0	1	1				0			A	A	A	A	A	R									POKEY
	2C40	0	1	0	1	1				1	A	A	A	A	A	A	A	R									EAROM read
	3000	0	1	1	0	0	0											W									Start VG
	3200	0	1	1	0	0	1				A	A	A	A	A	A	A	W	D	D	D	D	D	D	D	D	Latch EA address/data
	3400	0	1	1	0	1	0											W									Watchdog reset
	3600	0	1	1	0	1	1											W	D	D							Explosion pitch
	3600	0	1	1	0	1	1											W			D	D	D	D			Explosion volume
	3800	0	1	1	1	0	0											W									3800 VG reset
	3A00	0	1	1	1	0	1											W						D	D		EA control latch
	3C00	0	1	1	1	1	0								0	0	0	W	D								1-player start LED
	3C01	0	1	1	1	1	0								0	0	1		D								2-player start LED
	3C02	0	1	1	1	1	0								0	1	0		D								Not used
	3C03	0	1	1	1	1	0								0	1	1		D								Ship thrust sound
	3C04	0	1	1	1	1	0								1	0	0		D								Bank select
	3C05	0	1	1	1	1	0								1	0	1		D								Left coin counter
	3C06	0	1	1	1	1	0								1	1	0		D								Center coin counter
	3C07	0	1	1	1	1	0								1	1	1		D								Right coin counter
	3E00	0	1	1	1	1	1																				Noise generator reset
RAM, ROM	4000	1	0	0	0	0	0																				Vector RAM
	4400	1	0	0	0	1																					Vector RAM
	4800	1	0	0	1													R									Vector ROM
	5000	1	0	1	0													R									Vector ROM
	6000	1	1	0	0													R									Program ROM
	6800	1	1	0	1													R									Program ROM
	7000	1	1	1	0													R									Program ROM
	7800	1	1	1	1													R									Program ROM

POWER RESET AND WATCHDOG COUNTER

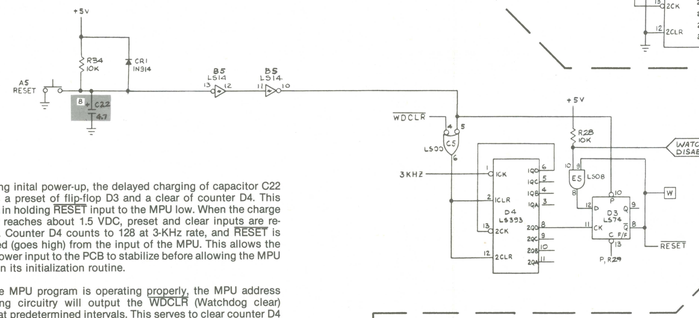

During inital power-up, the delayed charging of capacitor C22 causes a preset of flip-flop D3 and a clear of counter D4. This results in holding RESET input to the MPU low. When the charge of C22 reaches about 1.5 VDC, preset and clear inputs are removed. Counter D4 counts to 128 at 3-KHz rate, and RESET is removed (goes high) from the input of the MPU. This allows the logic power input to the PCB to stabilize before allowing the MPU to begin its initialization routine.

If the MPU program is operating properly, the MPU address decoding circuitry will output the WDCLR (Watchdog clear) signal at predetermined intervals. This serves to clear counter D4 before it counts up to the state that will create the RESET condition. If the MPU program strays from its intended sequence and does not output the WDCLR signal, counter D4 will count up to the RESET state and cause the MPU to return to its initialization routine.

denotes change by indicated revision

Denotes a test point

NMI COUNTER

The NMI (non-maskable interrupt) counter causes an interrupt at the NMI input of the MPU every 4 msec. The interrupt is derived by dividing 3 KHz by a factor of 12 through counter C4. The interrupt occurs when pin 6 of inverter B4 goes low. During power-up, the NMI counter is disabled by RESET. During Self-Test, the NMI is disabled by TEST.

POWER INPUT

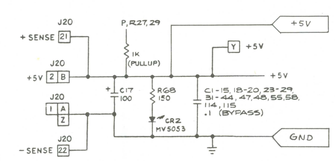

This circuitry consists of the PCB inputs and outputs for the +5 VDC logic power and 25 VAC input to the on board regulators. The +5 VDC inputs and outputs are discussed on Sheet 1, Side A of this schematic set.

The 25 VAC inputs are received by two full wave rectifiers. Diodes CR9 and CR8 rectify the negative cycle of the input and the 7915 regulates the voltage at -15 VDC. Diodes CR9 and CR10 rectify the positive pulse of the 25 VAC input and the 7815 regulates the voltage at +15 VDC. The 7812 regulates at +12 VDC. The 7805 regulates an additional 5 VDC for the DACs. Zener diode CR12 supplies the +8.2 VDC for the sample and hold circuit. The +22V (unregulated) is used to power operational amplifiers P11 and L8 in the audio output.

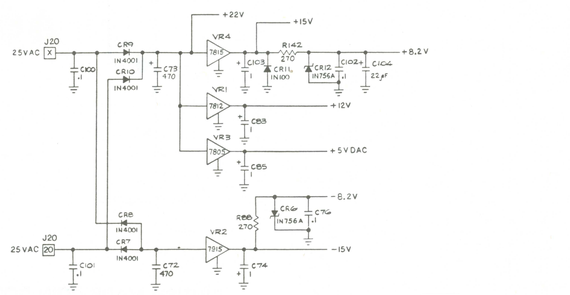

Denotes a test point

ROM/PROM CIRCUITRY

FROM SWITCH INPUTS SHEET 2, SIDE B

Program memory for the Asteroids Deluxe™ game is contained in three ROMs.

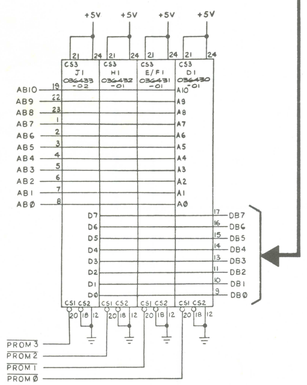

RAM CIRCUITRY

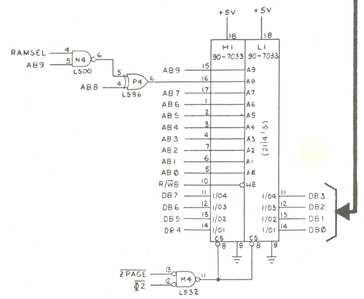

The RAM is the temporary storage space for the MPU and is enabled when ZPAGE (Zero Page enable) is low. When R/WB (from the MPU) is low, the RAM stores the data byte input (DB0 thru DB7) at the location addressed by the MPU address bus (AB0 thru AB7). When R/WB is high, the MPU reads the stored data byte at the addressed location.

The signal RAMSEL, when low, has the effect of swapping pages 2 and 3 within the RAM. This allows greater programming flexibility.

HIGH SCORE CIRCUITRY

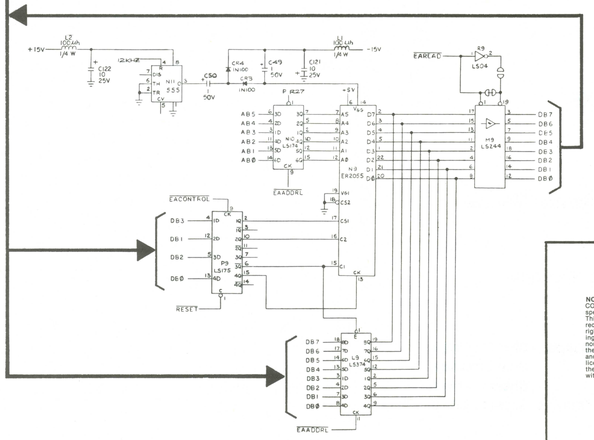

The High Score Memory circuit consists of an erasable reprogrammable ROM N9, latches L9, P9, N10 buffer M9, and timer N11.

N11 produces a 12KHz O-15V squarewave. This signal when +15, forward biases diode CR4 and allows capcitor C50 to charge th -29V. When it's OV, CR4 is then cut-off and CR3 is forward biased which causes C49 to develop a charge. C49 charges to approximately -28V. This is the potential required for EAROM N9 to operate.

The MPU addresses the EAROM (AB0-AB5) via latch N10, when EAADDRL goes high, and data is latched into the EAROM on DB0-DB7 through latch L9.

The function of the EAROM (read, write or erase) is determined by the MPU on data lines DB0-DB3. Latch D9 receives a high EACONTROL signal from the MPU address decoder and function data is passed to the EAROM.

Data in the EAROM is read by the MPU when the EAREAD is addressed by the MPU after a reset pulse or during self-test.

NOTICE TO ALL PERSONS RECEIVING THIS DRAWING
CONFIDENTIAL. Reproduction forbidden without the specific written permission of Atari, Inc., Sunnyvale, CA. This drawing is only conditionally issued, and neither receipt nor possession thereof confers or transfers any right in, or license to use, the subject matter of the drawing or any design or technical information shown thereon, nor any right to reproduce this drawing or any part thereof. Except for manufacture by vendors of Atari, Inc. under a written contract, or with written permission of license, no right to reproduce this drawing is granted or the subject matter thereof unless by written agreement with or written permission from the corporation.

ATARI®
A Warner Communications Company

Sheet 1, Side B

ASTEROIDS DELUXE™
Microprocessor
Section of 036471-01 and -02 C

© 1981 Atari, Inc.

Sheet 1, Side B
DP-173-01 1st printing