INPUTS

PLAYER INPUT CIRCUITRY

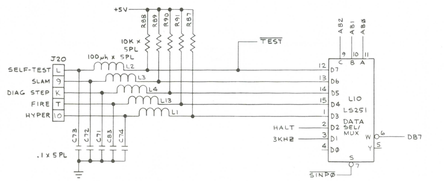

DIAG STEP (diagnostic step), 3 KHz, SELF-TEST SLAM, HALT, FIRE and HYPER inputs are read by the MPU when SINP0 (switch input zero enable) is low, Switches to be read are selected by A0 thru AB2 from the MPU. All inputs are read on DB7. Switch inputs are active when pulled to ground. DIAG STEP, 3 KHz, and SELF-TEST are signals read by the MPU to initiate and control the game's self-test procedure. SLAM is a signal read by the MPU to indicate the status of the antislam switch mounted on the coin door. The MPU reads HALT to determine the state of the vector generator.

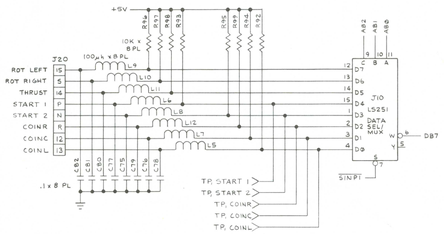

The coin door and some control panel switches are read by the MPU when SINP1 (switch input one enable) is low. Switches to be read are selected by AB0 thru AB2 from the MPU. All inputs are read on data line DB7. Switch inputs are "on" when pulled to ground.

OPTIONS INPUT CIRCUITRY

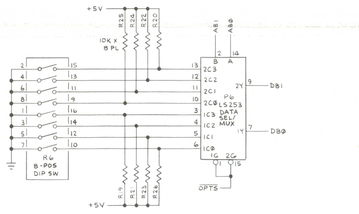

The game option switches are read by the MPU when OPTS (option switch enable) is low. Switch toggles to be read are selected by AB0 and AB1 from the MPU. Switch toggles 1, 3, 6, and 7 are read on data line DB0 and toggles 2, 4, 6 and 8 are read on DB1. Toggle inputs are "on" when pulled to ground.

OUTPUTS

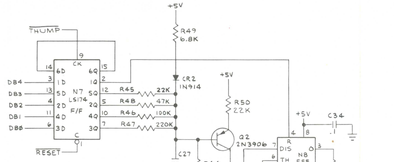

The THUMP sound is heard throughout play. The 555 is connected as an oscillator, enabled by N7 pin 2. The frequency is determined by the current coming out of Q2. This depends on its base voltage, which is derived from the four-bit code in N7.

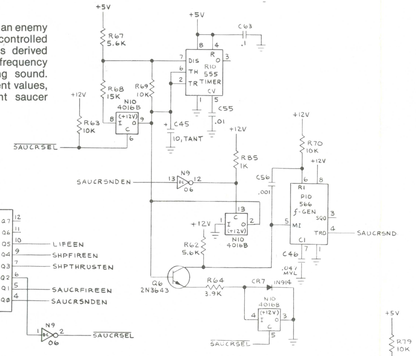

The SAUCER sound is heard when an enemy saucer appears. The 566 is a voltage-controlled oscillator. Its modulating voltage is derived from the 555. The 555 is a low frequency oscillator. The effect is a warbling sound. SAUCRSEL changes some component values, in order to provide for 2 different saucer sounds.

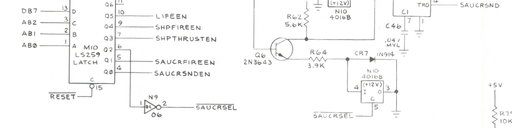

M10 latches control signals to enable different sounds.

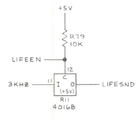

LIFE sound is heard when an extra life is gained. It is merely 3 KHz from the clock circuitry.

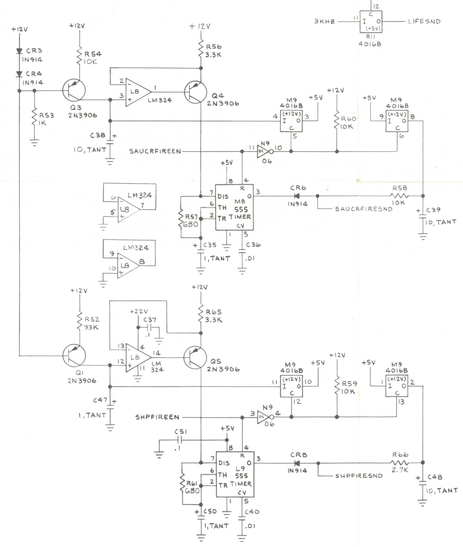

The Fire sounds for the Saucer and the Space Ships are generated by two identical circuits. Each contain a 555 operating as a voltage-controlled oscillator. The Saucer Firesound is initiated by SAUCRFIREEN, and the Space Ship Fire sound is initiated by SHPFIREEN. Each of the 555s is configured in such a way that when they are enabled, they output a signal of a specific frequency and amplitude. This signal begins to decay immediately, both in frequency and amplitude, due to the discharge of the control capacitors (C38 & 39 for Saucer Fire Sound; C47 & 48 for Ship Fire Sound).

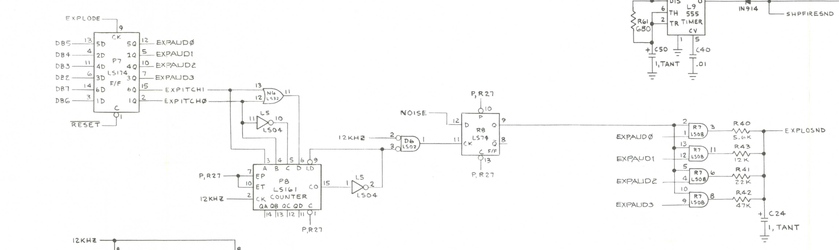

The EXPLODE sound is heard when any object explodes. Noise is sampled at a frequency determined by P8, and control bits EXPITCH0 and EXPITCH1. Changing the sampling rate changes the pitch of the explosion. The noise is amplitude-modulated in R7 by EXPAUD0-EXPAUD3.

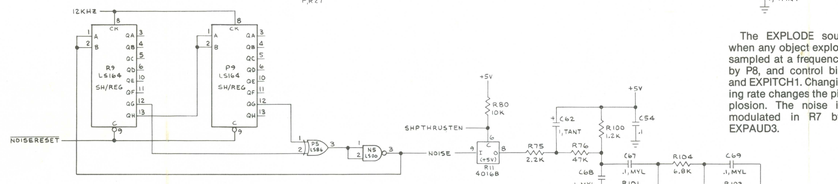

R9 and P9 generate random noise. This noise is filtered by P11 and produces the rumble sound heard when the ship is thrusting.

LAMP, LED, AND COIN COUNTER OUTPUT

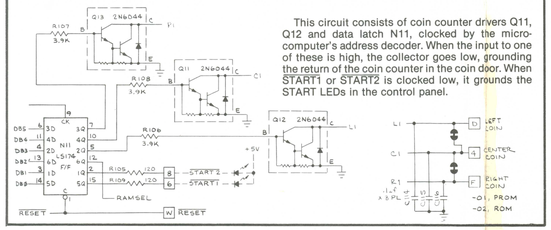

This circuit consists of coin counter drivers Q11, Q12 and data latch N11, clocked by the microcomputer's address decoder. When the input to one of these is high, the collector goes low, grounding the return of the coin counter in the coin door. When START1 or START2 is clocked low, it grounds the START LEDs in the control panel.

AUDIO OUTPUT

All sounds are mixed in ¼ of P11. This is Audio 1. The signal is then inverted by another ¼ of P11 and becomes Audio 2. These out-of-phase signals drive the speaker.

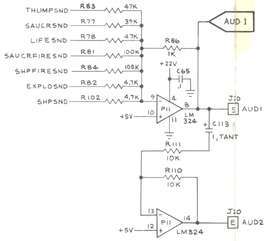

PART OF REGULATOR/AUDIO PCB

NOTE:
AUDIO AMPLIFIER IS PART OF REGULATOR/AUDIO PCB AND IS REPEATED ON SHEET 1, SIDE A.

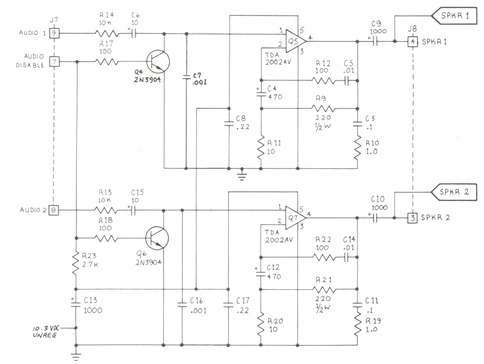

denotes a test point

VIDEO OUTPUTS

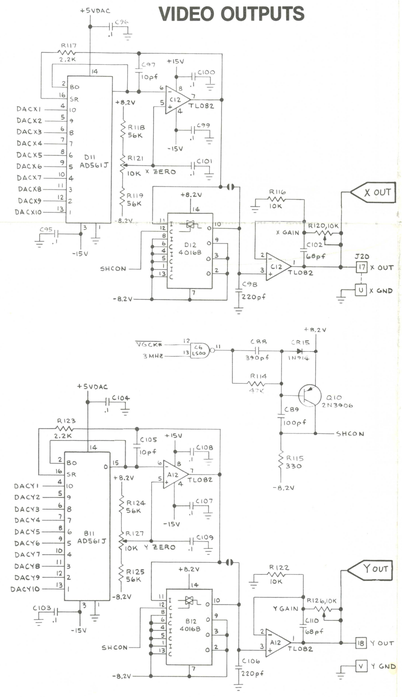

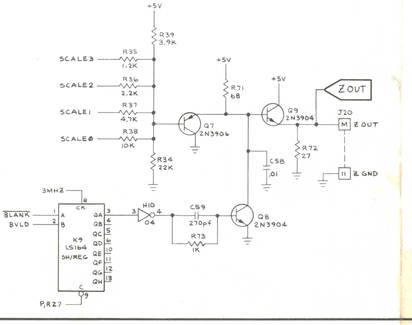

The video output circuit consists of three individual circuits; X axis, Y axis, and Z axis video output circuits. The X axis and Y axis video output circuits consist of a digital-to-analog (DAC) converter, current-to-voltage converter, sample and hold, sample and hold control, and amplifier. The Z axis video output circuit consists of a shift register and a summer.

X and Y Outputs

The DACs (B11 and D11) each receive binary numbers from the vector generator's position counters outputs. These numbers represent the location of the beam on the monitor. For the X axis, the number is 0 to 1,023, where 0 is at the far left of the monitor screen, 512 at the center, and 1,023 is at the far right. For the Y axis, the number is from 128 to 996 where 128 is at the bottom of the monitor screen, 512 is the center, and 996 is the top.

The DACs convert these binary number inputs to current output. The DAC's current output is applied to the pin 6 inputs of current-to-voltage converters A12 and C12. The pin 5 inputs ensure that the null points (resting point on the monitor screen) of the pin 7 outputs are 512 for the X axis and 512 for the Y axis.

From the current-to-voltage converters, the signal is fed to the sample and hold circuits. Analog switches B12 and D12 pass the voltages to sample and hold capacitors C77 and C84. This is controlled by SHCON (sample and hold control). SHCON is derived by gating 3 MHz from the microcomputer clock circuitry and VSCK* from the vector generator's state generator. The result of these inputs insures that the pin 7 outputs of voltage-to-current converters A12 and C12 have sufficiently stabilized before being applied to the sample and hold capacitors. The output swing of SHCON is −8 to +8 VDC. When SHCON is high, the voltage charges or discharges the sample and hold capacitor to the voltage value. The voltages are then applied to the second stages of A12 and C12 for an impedance matched output to the X and Y inputs of the monitor. Since the monitor doesn't have field adjustable X and Y gains, the gains are adjustable by variable resistors R87 and R93.

Z Output

The Z axis video output receives six inputs. BVLD (beam valid), from the output of the vector generator's position counters, tells the Z axis to draw the line. BLANK (vector line blank), from the vector generator's state machine, tells the Z axis to stop drawing a line. SCALE0 thru SCALE3 (grey level shading scale), from the output of the vector generator's data latch, tells the Z axis the grey level shading of the line that is being drawn on the monitor.

When BVLD and BLANK are both high, a high is clocked through shift register K9 that turns transistor Q3 off. This allows the scale inputs to be passed through transistor Q2. When BLANK goes low, a low is clocked through K9, transistor Q3 turns on, and the signal is grounded at the base of transistor Q2.

The scale inputs at the base of transistor Q1 determine Q1's emitter voltage, during the line draw period. The SCALE0 thru SCALE3 resistors R36 thru R39, resistor R35, and resistor R40 result in a range of about +1.0 VDC when all are low and +4.0 VDC when all are high. The emitter of Q1 follows at about +1.7 to 4.7 VDC, while the emitter of transistor Q2 follows at about +1.0 to 4.0 VDC. This output is applied to the Z input of the monitor. Since there are brightness and contrast controls in the monitor, there are no adjustments in this circuit.

Sheet 2, Side B

ASTEROIDS
Switch Inputs, Coin Counter, LED and Audio Outputs

NOTICE TO ALL PERSONS RECEIVING THIS DRAWING CONFIDENTIAL. Reproduction forbidden without the specific written permission of Atari, Inc., Sunnyvale, California. This drawing is transmitted to the recipient on the express condition that the recipient or any other person receiving it or any part thereof, or any information contained therein, or any copies made of it, or any information derived from it,