Rockola 1428 "P" Amp

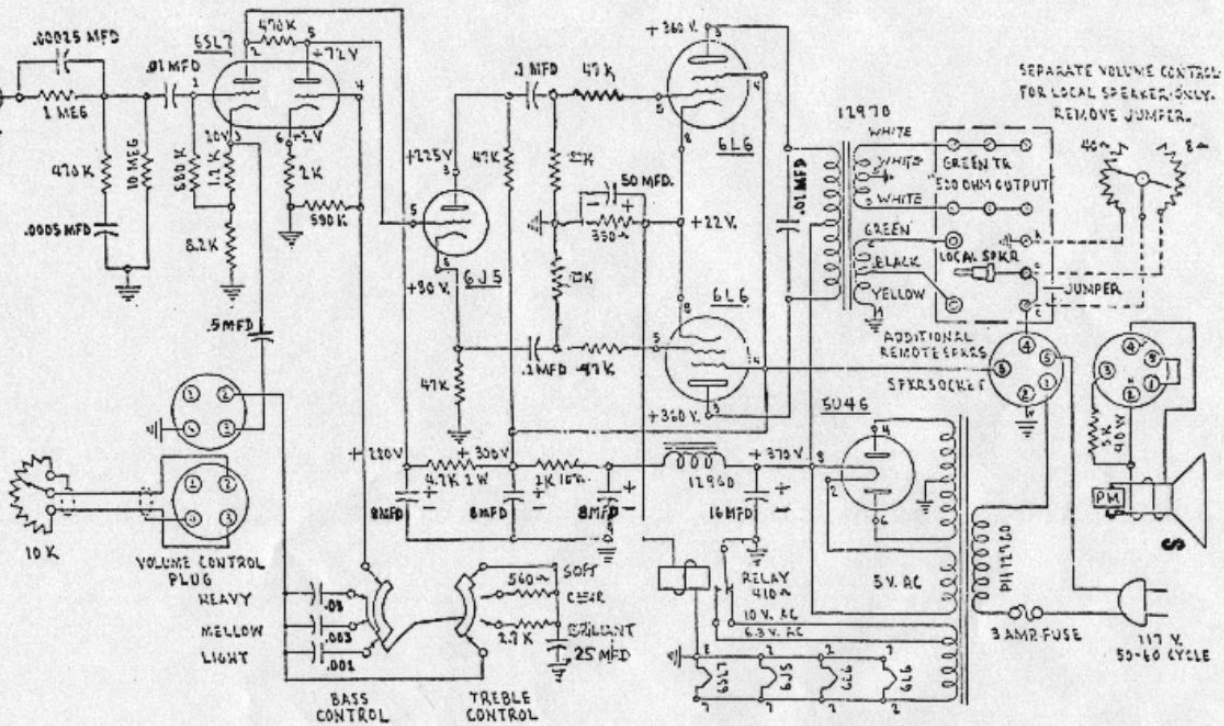

Note USE 10uF for 8uF
" 22uF for 16uF

FINISH	MATERIAL	NO. OF PART	ITEM	NAME OF PART
				AMPLIFIER SCHEMATIC MODEL (P)
Tolerance of ±.005 unless as noted. ±.010 unless as noted. Dimensions in parenthesis are for reference only. Show blueprint size in ft. in. & mm. Use 3 place decimals.				ROCK-OLA MFG. CORP. CHICAGO ILLINOIS
DO NOT SCALE				NUMBER 13306

PRINTED IN U.S.A.